Flat Cylinders

Flat-I	2.3-2.11
Square Flat-I	2.12-2.18
Flat-II	2.19-2.23
Square Flat-II	2.24-2.28
F02.F03.F04 (multiple power)	2.29-2.34
FOP (multiple position)	2.35-2.41
Flat Accessories	2.42-2.43
EF I Cylinders	2.44-2.57
EF 2 Cylinders	2.58-2.67
EFP and EFQ Cylinders	2.68-2.77
Stopper Cylinders	2.78
Twist Clamp Cylinders	2.79-2.82
Extruded Flat Lift Table	2.83-2.84
Twin Bore Cylinders	2.85-2.114
Narrow Profile Air Table Actuators	2.115-2.123
Low Profile Air Table Actuators	2.124
Diaphragm Cylinders	2.125
Miniature “Cube” Cylinders	2.126

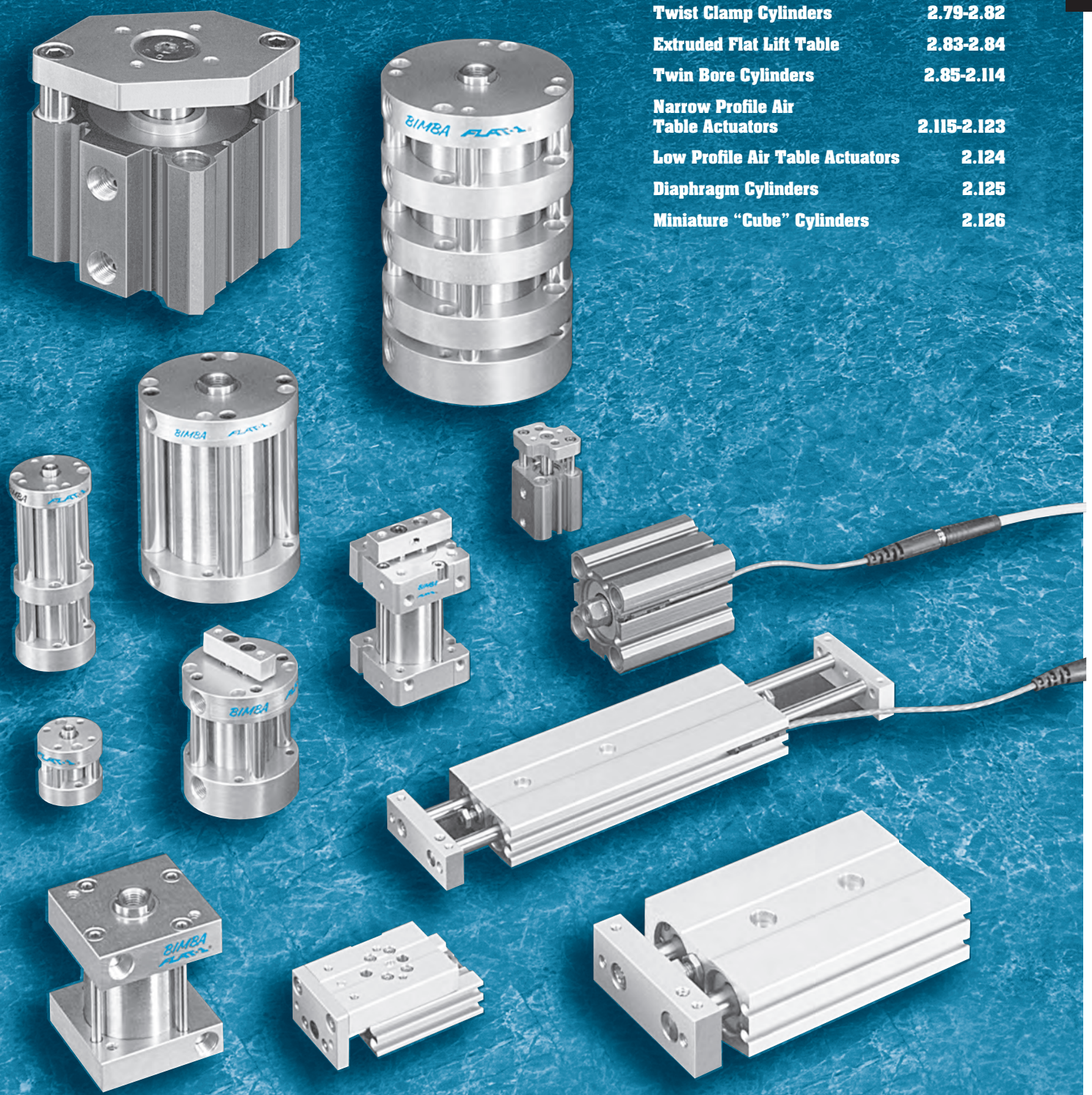

BIMBA FLAT-1 FITS RIGHT IN!

BIMBA Flat-1 cylinders were designed with space savings in mind. Six models offer six ways to save space.

Flat-1 –
The original round cylinder.

Square Flat-1 –
For additional mounting variations.

Flat-II –
The dual piston rod, nonrotating cylinder.

Square Flat-II –
The dual piston rod, square nonrotating cylinder.

FO2, 3, 4 –
Force multiplying cylinders.

FOP –
For three positions.

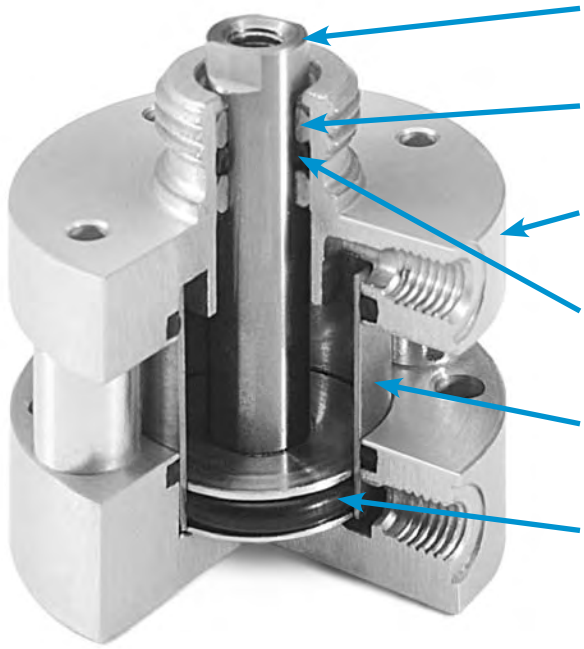

Space savings without sacrificing quality means better performance and longer cylinder life. Flat-1 offers these quality features:

- 304 stainless steel cylinder body with a mirror finish I.D. Stainless steel fights corrosion and scoring from dirt particles. The result is longer piston seal life.
- Oil impregnated bronze rod bushing is standard in all models.
- Ground and polished 303 stainless steel piston rod.
- High strength piston to rod connection.
- Precision machined, anodized aluminum alloy heads.

Approximate Power Factors (For all models except FO2, 3, 4)

9/16" (02)	=	0.25
3/4" (04)	=	0.4
1-1/16" (09)	=	0.9
1-1/2" (17)	=	1.7
2" (31)	=	3.1
2-1/2" (50)	=	5.0
3" (70)	=	7.0
4" (125)	=	12.5

For example, a 3/4" bore model FO-041 will exert a force of approximately 0.4 times the air line pressure.

- Body — 304 Stainless Steel
- Heads — Anodized Aluminum Alloy
- Piston Rod — Ground and Polished 303 Stainless Steel
- Seals — Buna N (High temperature seals optional)
- Rod Bushing — Oil Impregnated Bronze
- Spring Forces — See page 2.10
- Pressure Rating — 200 PSI Maximum (Air only)
- Temperature Rating — From -20˚F to +150˚F (-25˚C to +65˚C) Buna N seals with a temperature range of -20˚F to +150˚F (-25˚C to +65˚C) are standard in all Bimba air cylinders. Fluoroelastomer seals rated for higher temperature applications are available. If cylinders are operated below 0˚F (-18˚C) for extended time periods, special modifications may be required. Special seal materials are available upon request.

How to Order

The Model Number for all Flat-1 cylinders consists of three alphanumeric clusters. These designate type, bore size and stroke length, and mounting and special options. Please refer to the charts below for an example of Model Number FO-170.125-1V. This is a double acting, 1-1/2" bore, 1/8" stroke, pivot mount cylinder with high temperature option.

TYPE
FO – Double Acting, Single End Rod
FOD – Double Acting, Double End Rod
FOR – Reverse Acting
FOS – Single Acting

BORE SIZE	
02 – 9/16"	31 – 2"
04 – 3/4"	50 – 2-1/2"
09 – 1-1/16"	70 – 3"
17 – 1-1/2"	125 – 4"

STROKE LENGTH
0.125 - 1/8"
0.25 - 1/4"
0.375 - 3/8"
ETC.

FO-170.125-1 V

MOUNTING OPTIONS
(Enter in numeric order)
No Number - Basic model (Standard counterbored mounting holes)
1 - Pivot mount
1N - Pivot mount 90˚ from standard
2 - Trunnion mount, both ends[1]
2F - Front trunnion mount[1]
2R - Rear trunnion mount[1]
3 - Threaded mounting holes, both ends
3F - Threaded mounting holes, front
3R - Threaded mounting holes, rear
4 - Screw clearance holes, both ends[2]
4F - Screw clearance holes, front[2]
4R - Screw clearance holes, rear[2]
5 - Nose mount[3]

[1] Not available in 9/16" bore.
[2] "Screw clearance" to allow bolt head to pass through; no counter bores (see page 2.8).
[3] Available in FO, FOR and FOS models; includes heavy-duty rear head and wiper.

®Magnalube is a trademark of Carleton-Stuart Company.

OPTIONS	
(Enter in alphabetical order, except for EE which is last)	
B	– Bumpers, both ends[1]
BF	– Bumper, front only[1]
BR	– Bumper, rear only[1]
CFT	– Coarse female thread (fine thread standard) (see page 2.7)
CMT	– Male rod end (coarse thread) (see page 2.10)
G	– Magnalube® G
H	– Hollow rod (double end models only) (see page 2.10)
HD	– Heavy duty rear head (see page 2.9)[3]
J	– Failsafe operation (FOS models)[2]
L	– Low friction seals (see table page 2.9)[3]
M, M1, M3, M4	– Magnetic position sensing (see table page 2.9[3], 2.10, and Switch Products Section)
MT	– Male rod end (fine thread) (see page 2.10)
NT	– Non-threaded rod
P2, P3, P4	– Front port position #2, etc. (see page 2.6)[2]
Q	– Low temperature operation (-40°F to 200°F)
S	– Stainless steel fasteners (125 PSI maximum pressure rating – air only)
T1, T3, T4	– Additional switch mounting post located in position #1, 3 or 4
V	– High temperature option (0°F to 400°F)[4]
W	– Rod wiper (Buna N only) (see page 2.10)
Y	– Moly-coat (MoS_2 I. D. coating)
EE0.375	– 3/8" extra rod extension, etc.
EE1	– 1" extra rod extension, etc.

[1] Stroke is reduced by approximately .03" per bumper under 60 psi air pressure or greater. Stroke is reduced by approximately .13" per bumper under 0 psi air pressure. Option B has bumper each end, option BR and model FOS have rear bumper only, option BF and model FOR have front bumper only.
[2] Not available in 9/16" bore.
[3] Overall cylinder length increases with this option.
[4] If magnetic position sensing is specified with option V, standard Buna-N based magnet will be provided. Magnetic position sensing is not reliable above 200°F.

List Prices

Basic Model	Base Price by Bore Size							
	9/16"	3/4"	1-1/16"	1-1/2"	2"	2-1/2"	3"	4"
FO	$40.50	$41.85	$54.25	$64.55	$74.25	$94.30	$116.25	$171.10
FOS (0-1" Stroke)	43.45	46.20	59.80	69.30	79.50	101.00	124.35	184.05
FOS (1-1/8-4" Stroke)	47.55	49.10	63.45	74.40	84.75	109.55	133.00	192.60
FOR (0-1" Stroke)	52.15	53.65	68.15	82.00	92.45	114.60	138.65	205.25
FOR (1-1/8-4" Stroke)	53.20	55.10	69.60	87.20	97.70	123.20	147.15	213.65
Add per 1/8" of Stroke	0.35	0.35	0.45	0.60	0.80	1.00	1.00	1.20
FOD	58.70	60.35	75.85	93.30	107.25	132.80	159.85	226.55
Add per 1/8" of Stroke	0.40	0.40	0.50	0.80	1.05	1.15	1.25	1.60

Mounting Options	Adders by Bore Size							
	9/16"	3/4"	1-1/16"	1-1/2"	2"	2-1/2"	3"	4"
Pivot Mount (Options 1, 1N)	$11.30	$11.85	$13.80	$18.65	$21.65	$27.85	$33.55	$45.70
Trunnion Mount (Option 2, 2F, 2R)	N/A	9.90 per end	9.90 per end	9.90 per end	9.90 per end	11.20 per end	11.20 per end	11.85 per end
Threaded Mounting Holes (Options 3, 3F, 3R)	3.00 per end	3.20 per end	3.40 per end	4.20 per end	4.20 per end	4.80 per end	4.80 per end	5.90 per end
Screw Clearance Holes (Options 4, 4F, 4R)	2.50 per end	2.60 per end	2.60 per end	2.60 per end	2.60 per end	2.60 per end	2.60 per end	2.60 per end
Nose Mount (Option 5)	5.70	6.65	21.80	24.25	31.05	34.25	36.35	48.30

Options	Adders by Bore Size							
	9/16"	3/4"	1-1/16"	1-1/2"	2"	2-1/2"	3"	4"
B (both ends)	$9.60	$9.60	$20.40	$20.40	$26.95	$27.25	$27.75	$44.85
BF (front only)	6.05	6.05	14.40	14.40	20.95	20.95	20.95	33.50
BR (rear only)	3.65	3.65	6.05	6.05	6.05	6.35	6.35	11.35
EE (each 1/2" each end)	0.80	0.80	0.90	1.05	1.25	1.25	1.40	1.90
H	5.00	5.35	6.00	6.65	8.60	8.60	9.80	12.05
J (With Standard Seals)	N/A	.30	.35	.35	.40	.40	.40	.45
J (With High Temperature Seals)	N/A	.60	.85	.85	1.00	1.00	1.15	3.10
MT, CMT (each end)	4.05	4.30	4.75	5.10	7.15	7.15	8.45	10.05
V (With Standard Seals) Single Acting Reverse Acting Double Acting Double End Rod	 2.10 2.70 4.00 4.85	 2.15 3.05 4.30 5.00	 3.60 4.80 6.15 7.35	 5.95 7.30 9.85 11.20	 7.95 9.40 12.90 14.40	 11.40 12.70 17.55 18.95	 15.70 17.50 25.65 27.70	 21.35 23.30 32.15 34.30
V (With Low Friction Seals) Single Acting Reverse Acting Double Acting Double End Rod	 5.75 6.40 11.50 12.05	 5.90 6.65 11.65 12.40	 9.85 11.00 18.55 19.70	 12.55 13.95 23.10 24.45	 19.75 21.20 36.55 38.15	 25.40 26.85 46.20 47.60	 29.20 31.70 54.10 56.05	 37.80 39.75 65.20 67.00
W Single End Double End	 6.90 13.75	 7.30 14.60	 8.90 17.80	 9.45 18.85	 11.20 22.40	 11.70 23.40	 13.55 27.05	 14.30 28.60
L	3.40	3.50	4.30	4.80	5.70	7.00	8.05	9.60
Magnetic Piston Sensing (Options M, M1, M3, M4)	6.35	6.35	6.35	9.40	15.60	23.30	28.05	30.90
S	2.20	2.20	2.20	2.55	2.55	3.40	3.40	7.05
Switch Mounting Post (Options T1, T3, T4) (Per post)	2.40	2.40	3.15	3.15	3.15	3.85	3.85	3.85
Y (Adder per 1/8" of stroke)	.50	.50	.50	.50	.50	.50	.50	.50
Q (Low Temp Seals) Single Acting Reverse Acting Double Acting Double End Rod	 2.25 2.45 2.50 3.15	 2.75 3.10 3.15 3.90	 3.45 3.80 3.90 4.90	 4.35 4.75 4.90 6.10	 5.35 5.90 6.10 7.60	 6.70 7.30 7.60 9.60	 8.35 9.10 9.60 11.90	 10.35 11.45 11.90 14.85
Q (Low Temp w/L Option) Single Acting Reverse Acting Double Acting Double End Rod	 4.65 5.15 5.35 6.70	 5.90 6.50 6.70 8.35	 7.25 8.10 8.35 10.40	 9.05 10.05 10.40 13.00	 11.40 12.55 13.00 16.35	 14.20 15.70 16.35 20.30	 17.75 19.60 20.30 25.45	 22.20 24.45 25.45 31.85

No charge options – CFT, G, HD, NT, P2, P3, P4.

All product is sold F.O.B. shipping point. Prices are subject to change without notice.

Bimba is a JIT manufacturer and we are able to provide FO, FOD, FOR, or FOS model cylinders in *ANY 0.001" stroke length increment for all option styles within our standard three-day lead time.* Longer stroke lengths are also available upon request at standard lead times. Please consult Technical Assistance at 800-44-BIMBA for help.

The tables represent our standard stroke lengths. **Blue** stroke lengths are BASIC FO, FOD, FOS, and FOR cylinders in stock available for Same Day Shipping.

Basic Models

Model FO

(Double Acting, Single End Rod)

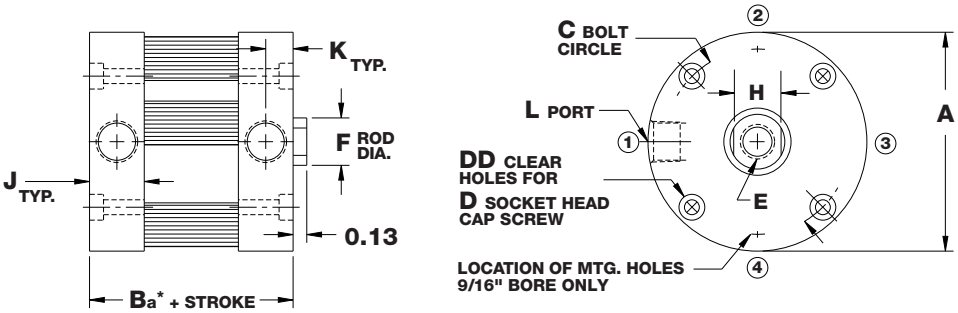

**Some options affect cylinder length; see page 2.9.*

Nominal Bore Diameter	Bore Code	Standard Stroke Length Availability															
9/16"	02	1/8"	1/4"	3/8"	1/2"	5/8"	3/4"	7/8"	1"	1-¼"	1-½"	1-¾"	2"	2-½"	3"	3-½"	4"
3/4"	04	1/8"	1/4"	3/8"	1/2"	5/8"	3/4"	7/8"	1"	1-¼"	1-½"	1-¾"	2"	2-½"	3"	3-½"	4"
1-1/16"	09	1/8"	1/4"	3/8"	1/2"	5/8"	3/4"	7/8"	1"	1-¼"	1-½"	1-¾"	2"	2-½"	3"	3-½"	4"
1-1/2"	17	1/8"	1/4"	3/8"	1/2"	5/8"	3/4"	7/8"	1"	1-¼"	1-½"	1-¾"	2"	2-½"	3"	3-½"	4"
2"	31	1/8"	1/4"	3/8"	1/2"	5/8"	3/4"	7/8"	1"	1-¼"	1-½"	1-¾"	2"	2-½"	3"	3-½"	4"
2-1/2"	50	1/8"	1/4"	3/8"	1/2"	5/8"	3/4"	7/8"	1"	1-¼"	1-½"	1-¾"	2"	2-½"	3"	3-½"	4"
3"	70	1/8"	1/4"	3/8"	1/2"	5/8"	3/4"	7/8"	1"	1-¼"	1-½"	1-¾"	2"	2-½"	3"	3-½"	4"
4"	125	1/8"	1/4"	3/8"	1/2"	5/8"	3/4"	7/8"	1"	1-¼"	1-½"	1-¾"	2"	2-½"	3"	3-½"	4"

Model FOD

(Double Acting, Double End Rod)

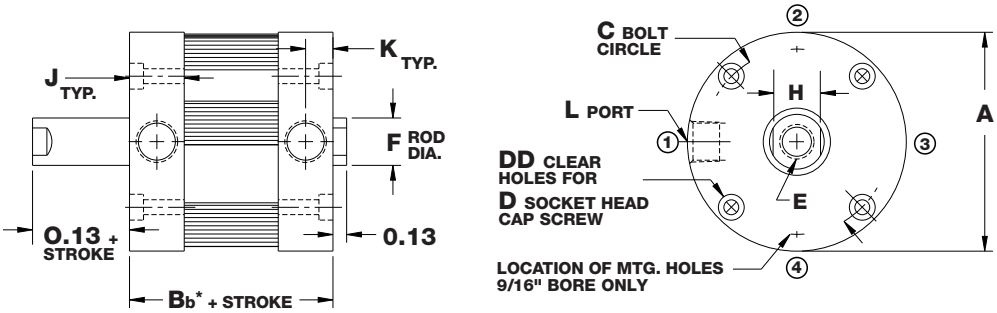

**Some options affect cylinder length; see page 2.9.*

Nominal Bore Diameter	Bore Code	Standard Stroke Length Availability															
9/16"	02	1/8"	1/4"	3/8"	1/2"	5/8"	3/4"	7/8"	1"	1-¼"	1-½"	1-¾"	2"	2-½"	3"	3-½"	4"
3/4"	04	1/8"	1/4"	3/8"	1/2"	5/8"	3/4"	7/8"	1"	1-¼"	1-½"	1-¾"	2"	2-½"	3"	3-½"	4"
1-1/16"	09	1/8"	1/4"	3/8"	1/2"	5/8"	3/4"	7/8"	1"	1-¼"	1-½"	1-¾"	2"	2-½"	3"	3-½"	4"
1-1/2"	17	1/8"	1/4"	3/8"	1/2"	5/8"	3/4"	7/8"	1"	1-¼"	1-½"	1-¾"	2"	2-½"	3"	3-½"	4"
2"	31	1/8"	1/4"	3/8"	1/2"	5/8"	3/4"	7/8"	1"	1-¼"	1-½"	1-¾"	2"	2-½"	3"	3-½"	4"
2-1/2"	50	1/8"	1/4"	3/8"	1/2"	5/8"	3/4"	7/8"	1"	1-¼"	1-½"	1-¾"	2"	2-½"	3"	3-½"	4"
3"	70	1/8"	1/4"	3/8"	1/2"	5/8"	3/4"	7/8"	1"	1-¼"	1-½"	1-¾"	2"	2-½"	3"	3-½"	4"
4"	125	1/8"	1/4"	3/8"	1/2"	5/8"	3/4"	7/8"	1"	1-¼"	1-½"	1-¾"	2"	2-½"	3"	3-½"	4"

Basic Models

Model FOS

(Single Acting,
Spring Return,
Rod Normally Retracted)

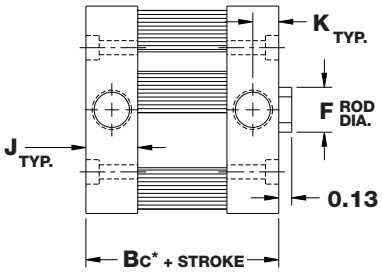

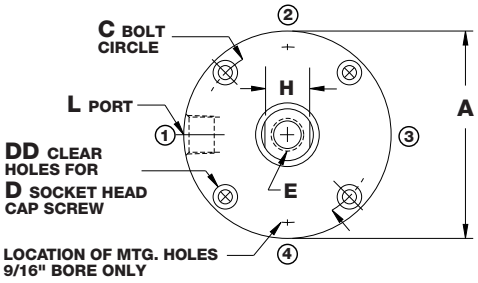

See page 2.10 for spring forces.
**Some options affect cylinder length; see page 2.9.*

Nominal Bore Diameter	Bore Code	Standard Stroke Length Availability															
9/16"	02	**1/8"**	**1/4"**	3/8"	**1/2"**	5/8"	3/4"	7/8"	**1"**	1-¼"	1-½"	1-¾"	2"	2-½"	3"	3-½"	4"
3/4"	04	**1/8"**	**1/4"**	3/8"	**1/2"**	5/8"	3/4"	7/8"	**1"**	1-¼"	1-½"	1-¾"	2"	2-½"	3"	3-½"	4"
1-1/16"	09	1/8"	**1/4"**	**3/8"**	**1/2"**	5/8"	**3/4"**	7/8"	**1"**	1-¼"	1-½"	1-¾"	**2"**	2-½"	3"	3-½"	4"
1-1/2"	17	1/8"	**1/4"**	3/8"	**1/2"**	5/8"	3/4"	7/8"	**1"**	1-¼"	1-½"	1-¾"	**2"**	2-½"	3"	3-½"	4"
2"	31	1/8"	**1/4"**	3/8"	1/2"	5/8"	3/4"	7/8"	**1"**	1-¼"	1-½"	1-¾"	2"	2-½"	3"	3-½"	4"
2-1/2"	50	1/8"	1/4"	3/8"	**1/2"**	5/8"	3/4"	7/8"	1"	1-¼"	1-½"	1-¾"	2"	2-½"	3"	3-½"	4"
3"	70	1/8"	1/4"	3/8"	1/2"	5/8"	3/4"	7/8"	1"	1-¼"	1-½"	1-¾"	2"	2-½"	3"	3-½"	4"
4"	125	1/8"	1/4"	3/8"	1/2"	5/8"	3/4"	7/8"	1"	1-¼"	1-½"	1-¾"	2"	2-½"	3"	3-½"	4"

Model FOR

(Reverse Acting,
Spring Return,
Rod Normally Extended)

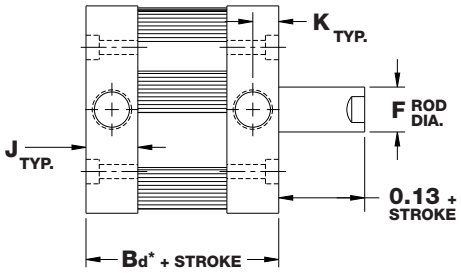

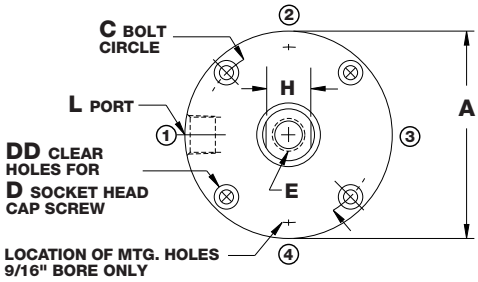

See page 2.10 for spring forces.
**Some options affect cylinder length; see page 2.9.*

Nominal Bore Diameter	Bore Code	Standard Stroke Length Availability															
9/16"	02	1/8"	1/4"	3/8"	1/2"	5/8"	3/4"	7/8"	1"	1-¼"	1-½"	1-¾"	2"	2-½"	3"	3-½"	4"
3/4"	04	1/8"	1/4"	3/8"	1/2"	5/8"	3/4"	7/8"	1"	1-¼"	1-½"	1-¾"	2"	2-½"	3"	3-½"	4"
1-1/16"	09	1/8"	1/4"	3/8"	**1/2"**	5/8"	3/4"	7/8"	1"	1-¼"	1-½"	1-¾"	2"	2-½"	3"	3-½"	4"
1-1/2"	17	1/8"	1/4"	3/8"	1/2"	5/8"	3/4"	7/8"	1"	1-¼"	1-½"	1-¾"	2"	2-½"	3"	3-½"	4"
2"	31	1/8"	1/4"	3/8"	1/2"	5/8"	3/4"	7/8"	1"	1-¼"	1-½"	1-¾"	2"	2-½"	3"	3-½"	4"
2-1/2"	50	1/8"	1/4"	3/8"	1/2"	5/8"	3/4"	7/8"	1"	1-¼"	1-½"	1-¾"	2"	2-½"	3"	3-½"	4"
3"	70	1/8"	1/4"	3/8"	1/2"	5/8"	3/4"	7/8"	1"	1-¼"	1-½"	1-¾"	2"	2-½"	3"	3-½"	4"
4"	125	1/8"	1/4"	3/8"	1/2"	5/8"	3/4"	7/8"	1"	1-¼"	1-½"	1-¾"	2"	2-½"	3"	3-½"	4"

Dimensions (in)

(Basic Model)

Bore	A	Ba*	Bb*	Bc*				Bd*				C	DD
				0-1" Stk.	1.001-2" Stk.	2.001-3" Stk.	3.001-4" Stk.	0-1" Stk.	1.001-2" Stk.	2.001-3" Stk.	3.001-4" Stk.		
9/16" (02)	1.12	0.56	0.69	0.81	1.38	1.96	2.52	1.06	1.62	2.14	2.70	0.88	2
3/4" (04)	1.50	0.56	0.69	0.81	1.38	1.94	2.50	1.06	1.62	2.19	2.75	1.22	4
1-1/16" (09)	2.00	0.88	0.94	0.88	1.50	2.13	2.75	1.38	2.00	2.63	3.25	1.69	4
1-1/2" (17)	2.62	0.88	1.00	0.88	1.50	2.13	2.75	1.38	2.00	2.63	3.25	2.19	4
2" (31)	3.12	0.94	1.06	0.94	1.56	2.19	2.81	1.44	2.06	2.69	N/A	2.69	4
2-1/2" (50)	3.75	1.19	1.31	1.19	2.06	2.94	2.81	1.94	2.81	2.81	N/A	3.25	4
3" (70)	4.25	1.25	1.38	1.25	2.12	3.00	3.88	2.00	2.88	2.88	N/A	3.78	4
4" (125)	5.50	1.56	1.69	1.56	2.44	3.31	4.19	2.31	3.19	3.19	N/A	4.94	4

Bore	D	E Standard	E Coarse	E Depth	F	H	J	K	L
9/16" (02)	#4	#8-32 UNC	N/A	0.46	0.25	0.22	0.34	0.14	#10-32 UNF
3/4" (04)	#6	#10-32 UNF	#10-24 UNC	0.46	0.31	0.25	0.34	0.14	#10-32 UNF
1-1/16" (09)	#6	5/16-24 UNF	5/16-18 UNC	0.70	0.50	0.44	0.50	0.25	1/8 NPT
1-1/2" (17)	#10	3/8-24 UNF	3/8-16 UNC	0.70	0.63	0.50	0.50	0.25	1/8 NPT
2" (31)	#10	1/2-20 UNF	1/2-13 UNC	0.70	0.75	0.63	0.53	0.25	1/8 NPT
2-1/2" (50)	1/4	1/2-20 UNF	1/2-13 UNC	0.70	0.75	0.63	0.66	0.33	1/4 NPT
3" (70)	1/4	5/8-18 UNF	5/8-11 UNC	0.73	0.88	0.75	0.69	0.33	1/4 NPT
4" (125)	5/16	3/4-16 UNF	3/4-10 UNC	0.80	1.00	0.88	0.84	0.42	3/8 NPT

See page 2.9 for length adders for options.

Weights

Bore	Approximate Cylinder Weights (oz.)							
	FO, FOS		FOD			FOR		Nose Mount option
	Base	Adder per 1/8" of stroke	Base	Adder per 1/8" of stroke	Adder per 1/8" of stroke for -H option	Base	Adder per 1/8" of stroke	Adder to base weight
9/16" (02)	1.2	0.08	1.3	0.15	0.1	1.3	0.08	0.1
3/4" (04)	1.9	0.1	2.1	0.2	0.15	2.0	0.1	0.2
1-1/16" (09)	4.9	0.3	5.8	0.4	0.3	5.3	0.3	1.1
1-1/2" (17)	9.6	0.4	11.2	0.6	0.5	10.5	0.4	1.8
2" (31)	13.0	0.5	15.2	0.7	0.6	14.0	0.5	2.7
2-1/2" (50)	22.4	0.6	28.0	0.8	0.7	25.0	0.6	3.1
3" (70)	28.9	0.8	38.0	1.1	0.9	32.5	0.8	3.5
4" (125)	55.7	1.0	71.8	1.3	1.1	61.8	1.0	5.9

Mounting Options

Trunnion Mount

(Option 2F, 2R, 2)
Available in front, rear, or both locations.
Not available in 9/16" bore.

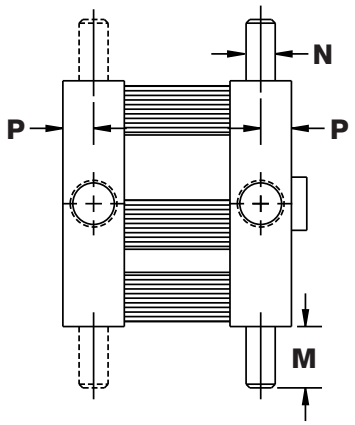

Pivot Mount

(Option 1, 1N)
Available in standard or 90˚.
Complete with bronze pivot bushing.
Not available as an accessory.
Option 1 as shown.

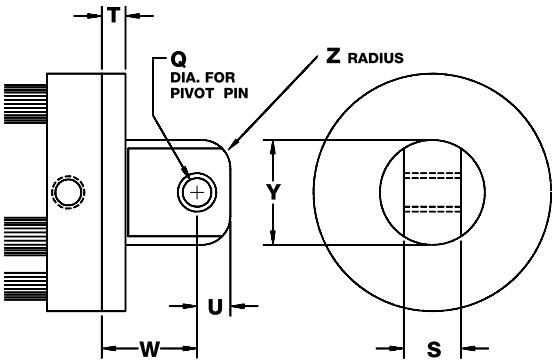

Threaded Mounting Holes

(Option 3F, 3R, 3)
Available in front, rear, or both locations.
(-3R shown)

9/16" Bore

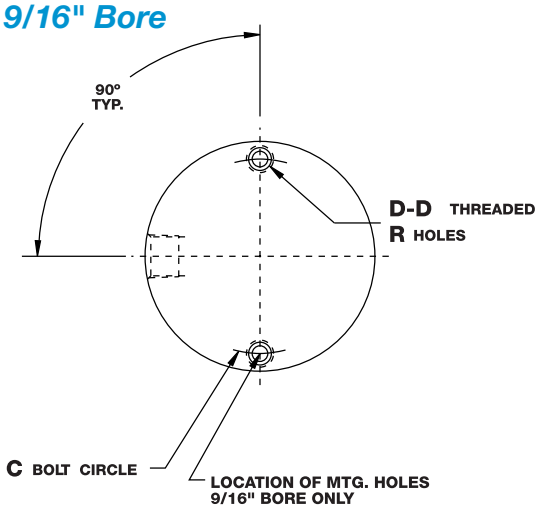

3/4" Bore and larger

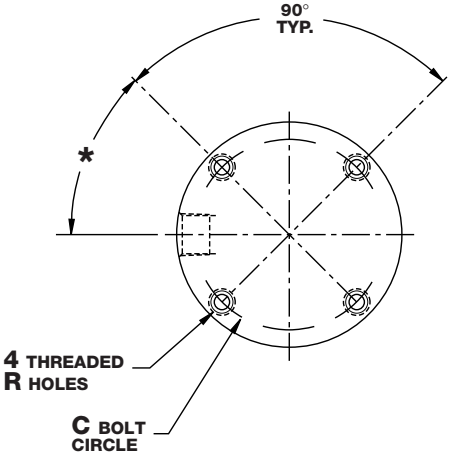

*43˚-3/4" Bore only 45˚-all other bores

Screw Clearance Holes

(Option 4F, 4R, 4)
Available in front, rear, or both locations.
(-4R shown)

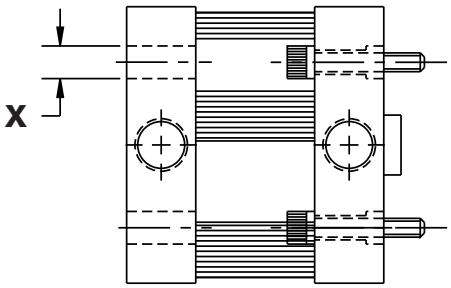

Nose Mount

(Option 5)
Available in FO, FOS, FOR models.

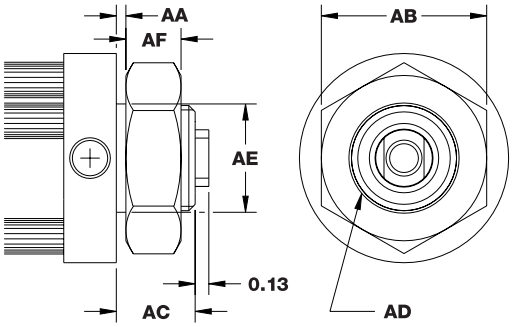

Mounting Option Dimensions (in)

Bore	AA	AB	AC	AD	AE	AF	M	N	P	Q
9/16" (02)	.06	0.75 Hex	.38	1/2 – 20 UNF-2A	.50	.31	N/A	N/A	N/A	0.19
3/4" (04)	.06	0.75 Hex	.38	5/8 – 18 UNF-2A	.62	.25	0.31	0.12	0.17	0.19
1-1/16" (09)	.13	1.50 Hex	.75	1 – 14 UNS-2A	1.00	.55	0.50	0.25	0.25	0.19
1-1/2" (17)	.13	1.88 Hex	.75	1-1/4 – 12 UNF-2A	1.25	.52	0.50	0.25	0.25	0.38
2" (31)	.19	1.88 Hex	.88	1-3/8 – 12 UNF-2A	1.38	.52	0.50	0.25	0.25	0.38
2-1/2" (50)	.25	1.88 Hex	1.00	1-3/8 – 12 UNF-2A	1.38	.52	0.63	0.31	0.33	0.38
3" (70)	.25	1.88 Hex	1.00	1-3/8 – 12 UNF-2A	1.38	.52	0.63	0.31	0.33	0.63
4" (125)	.19	2.62 Hex	1.12	1-3/4 – 12 UN-2A	1.75	.88	0.75	0.38	0.42	0.63

Dimensions (in)

Bore	R	S	T	U	W	X	Y	Z
9/16" (02)	#4-40 UNC	0.38	0.19	0.25	0.75	0.17	0.63	0.19
3/4" (04)	#6-32 UNC	0.38	0.19	0.25	0.75	0.23	0.75	0.19
1-1/16" (09)	#6-32 UNC	0.38	0.25	0.25	0.81	0.25	0.75	0.19
1-1/2" (17)	#10-24 UNC	0.75	0.25	0.44	1.19	0.34	1.38	0.38
2" (31)	#10-24 UNC	0.75	0.31	0.44	1.25	0.34	1.38	0.38
2-1/2" (50)	1/4-20 UNC	0.75	0.38	0.44	1.31	0.41	1.38	0.38
3" (70)	1/4-20 UNC	1.00	0.38	0.56	1.69	0.41	1.88	0.38
4" (125)	5/16-18 UNC	1.00	0.44	0.56	1.75	0.50	1.88	0.38

Maximum Torque Recommendations for Nose Mount Option (ft-lb)

Bore	Maximum Torque
9/16" (02)	1
3/4" (04)	28
1-1/16" (09)	100
1-1/2" (17)	120
2" (31)	130
2-1/2" (50)	130
3" (70)	130
4" (125)	150

Length Adder Dimensions for Options

(Dimensional variations from standard as shown.)

Bore	Length Adder				
	Low Friction Seals (L)	Heavy Duty Rear Head* (HD)	Magnetic Position Sensing** (M)		
			FO, FOD	FOS	FOR
9/16" (02)	0.25	0.13	0.88	0.63	0.38
3/4" (04)	0.25	0.13	0.88	0.88	0.88
1-1/16" (09)	0.38	0.19	0.88	0.88	0.88
1-1/2" (17)	0.38	0.19	0.88	0.88	0.88
2" (31)	0.38	0.19	0.88	0.88	0.88
2-1/2" (50)	0.38	0.25	0.88	0.88	0.88
3" (70)	0.50	0.25	0.88	0.88	0.88
4" (125)	0.50	0.38	0.88	0.88	0.88

**Heavy duty rear head is recommended for applications where the cylinder is mounted on the front face or trunnion-mounted, and impact loading (20 or more cycles per minute) occurs between the piston and rear head. It increases the overall length of the cylinder as shown.*

***A minimum stroke of 0.38 inches is required to sense extending end-of-stroke position. For low friction seals used in conjunction with magnetic position sensing, use M length adder only.*

Options

Rod Wiper (Option W)

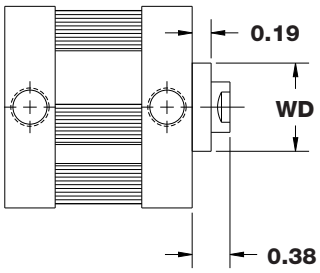

Bore	WD
9/16" (02)	0.56
3/4" (04)	0.69
1-1/16" (09)	0.88
1-1/2" (17)	1.00
2" (31)	1.13
2-1/2" (50)	1.13
3" (70)	1.25
4" (125)	1.38

Male Rod Ends (Option MT or CMT)

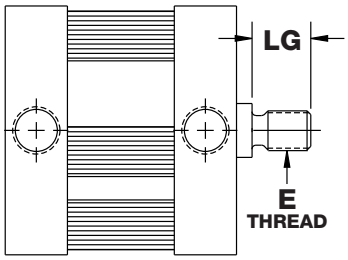

Bore	E		LG
	MT	CMT	
9/16" (02)	#8-32 UNC	N/A	0.38
3/4" (04)	#10-32 UNF	#10-24 UNC	0.38
1-1/16" (09)	5/16-24 UNF	5/16-18 UNC	0.50
1-1/2" (17)	3/8-24 UNF	3/8-16 UNC	0.50
2" (31), 2-1/2" (50)	1/2-20 UNF	1/2-13 UNC	0.63
3" (70)	5/8-18 UNF	5/8-11 UNC	0.75
4" (125)	3/4-16 UNF	3/4-10 UNC	0.75

FOD Hollow Rods (Option H)

Bore	Hole Diameter	
	Female Rod Thread	Male Rod Thread
9/16" (02)	0.14	N/A
3/4" (04)	0.14	0.09
1-1/16" (09)	0.22	0.16
1-1/2" (17)	0.28	0.19
2" (31)	0.38	0.25
2-1/2" (50)	0.38	0.25
3" (70)	0.44	0.31
4" (125)	0.50	0.38

Enclosed Spring Forces

Bore	Maximum Force (lb)	Spring Rate			
		0.12 to 1" Stroke (lb/in)	1.001 to 2" Stroke (lb/in)	2.001 to 3" Stroke (lb/in)	3.001 to 4" Stroke (lb/in)
9/16" (02)	5.25	4.25	1.75	1.24	0.88
3/4" (04)	10.00	6.00	2.50	1.76	1.25
1-1/16" (09)	11.50	6.00	2.50	1.76	1.25
1-1/2" (17)	13.00	5.50	2.25	1.60	1.13
2" (31)	13.00	5.50	2.25	1.60	1.13
2-1/2" (50)	25.00	6.50	2.75	1.93	1.38
3" (70)	25.00	6.50	2.75	1.93	1.38
4" (125)	25.00	6.50	2.75	1.93	1.38

MRS Switch Option Dimensions

For all ROUND Flat-1 Series Cylinder -M option, the default switch mounting post location is Position 2. To locate the post to other positions, please specify options M1, M3, or M4. For additional tracks, please specify options T1, T3, or T4 for the appropriate location.

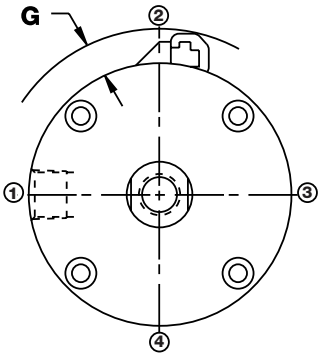

Bore Designator	Bore	G inch (mm)
02	9/16" (14mm)	0.29 (7.4)
04	3/4" (19mm)	0.25 (6.4)
09	1-1/16" (27mm)	0.07 (1.8)
17	1-1/2" (38mm)	0.02 (.5)
31	2" (50mm)	0.03 (.8)
50	2-1/2" (63mm)	0.02 (.5)
70	3" (76mm)	0.03 (.8)
125	4" (101mm)	0.00 (0)

Repair Kits

Single End Rod Kits

Basic Repair Kit (K-B-FO-__)*		
Part No.	**Description**	**Quantity**
PF-1	Rod Seal	1
PF-2	Piston Seal	1
PF-3	Tube Seal	2
PF-4	Bushing	2
Wiper Option Basic Repair Kit (K-B-FO-W-__)*		
Part No.	**Description**	**Quantity**
PF-1	Rod Seal	1
PF-2	Piston Seal	1
PF-3	Tube Seal	2
PF-4	Bushing	1
PF-5	Wiper Bushing	1
PF-6	Wiper	1

Double End Rod Kits

Basic Repair Kit (K-B-FOD-__)*		
Part No.	**Description**	**Quantity**
PF-1	Rod Seal	1
PF-2	Piston Seal	1
PF-3	Tube Seal	2
PF-4	Bushing	2
Wiper Option Basic Repair Kit (K-B-FOD-W-__)*		
Part No.	**Description**	**Quantity**
PF-1	Rod Seal	2
PF-2	Piston Seal	1
PF-3	Tube Seal	2
PF-5	Wiper Bushing	2
PF-6	Wiper	2

**Must specify bore size when ordered. Contact your local BIMBA Distributor for pricing on kits and other repair parts.*

Single End Rod Kits for Nose Mount Option

Basic Repair Kit (K-B-FO-N)		
Part No.	**Description**	**Quantity**
PF-1	Rod Seal	1
PF-2	Piston Seal	1
PF-3	Tube Seal	2
PF-4	Bushing	2
Wiper for Nose Mount Option		
D-63632	9/16" (02)	1
D-63633	3/4" (04)	1
D-63634	1-1/16" (09)	1
D-63635	1-1/2" (17)	1
D-63636	2" (31), 2-1/2" (50)	1
D-63637	3" (70)	1
D-63638	4" (125)	1

Mounting Nuts for Nose Mount Option			
Bore	**Part No.**	**Bore**	**Part No.**
9/16" (02)	D-98	2" (31)	D-2540
3/4" (04)	D-62702	2-1/2" (50)	D-2540
1-1/16" (09)	D-1331	3" (70)	D-2540
1-1/2" (17)	D-508	4" (125)	D-62703

Bimba Square FLAT-1

The convenient alternative for horizontal and side mounting, with provisions for both bottom flush or face mounting. The Square Flat-1 also minimizes the centerline distance when cylinders are mounted side-by side.

- Body — 304 Stainless Steel
- Heads — Anodized Aluminum Alloy
- Piston Rod — Ground and Polished 303 Stainless Steel
- Seals — Buna N (High temperature seals optional)
- Rod Bushing — Oil Impregnated Bronze
- Tie Rods — 303 Stainless Steel
- Spring Forces — See page 2.18
- Pressure Rating — Bore Sizes 3/4"-2" 200 PSI Maximum (Air only)
  Bore Sizes 2-1/2"-4" 150 PSI Maximum (Air only)
- Temperature Rating — From -20˚F to +150˚F (-25˚C to +65˚C)
  Buna N seals with a temperature range of -20˚F to +150˚F (-25˚C to +65˚C) are standard in all Bimba air cylinders. Fluoroelastomer seals rated for higher temperature applications are available. If cylinders are operated below 0˚ (-18˚C) for extended time periods, special modifications may be required. Special seal materials are available upon request.

How to Order

The Model Number for all Flat-1 cylinders consists of three alphanumeric clusters. These designate type, bore size and stroke length, and options. Please refer to the charts below for an example of Model Number FS-170.375-1V. This is a double acting, 1-1/2" bore, 3/8" stroke, pivot mount cylinder with high temperature option.

TYPE
FS – Double Acting, Single End Rod
FSD – Double Acting, Double End Rod
FSR – Reverse Acting
FSS – Single Acting

BORE SIZE	
04 – 3/4"	50 – 2-1/2"
09 – 1-1/16"	70 – 3"
17 – 1-1/2"	125 – 4"
31 – 2"	

STROKE LENGTH
0.125 - 1/8"
0.25 - 1/4"
0.375 - 3/8"
ETC.

FS-170.375-1 V

MOUNTING OPTIONS	
No Number	– Basic model
1	– Pivot mount
1N	– Pivot mount 90˚ from standard

OPTIONS

(Enter in alphabetical order, except for EE which is last)

B	–	Bumpers, both ends[1]
BF	–	Bumper, front only[1]
BR	–	Bumper, rear only[1]
CFT	–	Coarse female thread (see page 2.16)
CMT	–	Male rod end (coarse thread) (see page 2.17)
G	–	Magnalube® G
H	–	Hollow rod (double end models only) (see page 2.18)
J	–	Failsafe operation (FSS models)
L	–	Low friction seals (see table page 2.17)
M, M1, M4	–	Magnetic position sensing (see table page 2.17[2], 2.27, and Switch Products Section)
MT	–	Male rod end (fine thread) (see page 2.17)
NT	–	Non-threaded rod
Q	–	Low temperature option (-40°F to 200°F)
T1, T4	–	Additional switch track located in position #1 or 4
V	–	High temperature option (0°F to 400°F)
W	–	Rod wiper (Buna N, see page 2.17)[3]
Y	–	Moly-coat (MoS_2 I. D. coating)
EE0.375	–	3/8" extra rod extension, etc.
EE1	–	1" extra rod extension, etc.

[1] Stroke is reduced by .03" per end (.06" for option B); FSS, BR only; FSR, BF only.

[2] Overall cylinder length increases with this option.

[3] If magnetic position sensing is specified with option V, standard Buna-N based magnet will be provided. Magnetic position sensing is not reliable above 200°F.

List Prices

Basic Model	Base Price by Bore Size						
	3/4"	1-1/16"	1-1/2"	2"	2-1/2"	3"	4"
FS	$49.00	$58.45	$72.80	$83.85	$116.50	$135.55	$246.30
FSS (0-1" Stroke)	51.55	62.90	78.00	95.15	125.00	147.15	263.30
FSS (1-1/8-4" Stroke)	57.10	70.75	93.30	109.85	132.20	155.05	271.10
FSR (0-1" Stroke)	56.25	69.60	86.75	98.20	136.20	162.75	285.80
FSR (1-1/8-4" Stroke)	63.10	77.05	95.05	109.95	143.60	170.55	293.75
Add per 1/8" of Stroke	0.35	0.45	0.60	0.80	0.90	1.00	1.20
FSD	70.60	80.50	97.90	116.25	163.60	190.55	314.80
Add per 1/8" of Stroke	0.40	0.50	0.80	1.05	1.15	1.25	1.60

Basic Model	Base Price by Bore Size						
	3/4"	1-1/16"	1-1/2"	2"	2-1/2"	3"	4"
Pivot Mount (Options 1, 1N)	$15.60	$17.05	$21.55	$24.15	$28.50	$34.35	$46.75

Options	Adders by Bore Size						
	3/4"	1-1/16"	1-1/2"	2"	2-1/2"	3"	4"
B (both ends)	$9.60	$20.40	$20.40	$26.95	$27.25	$27.25	$44.85
(BF (front only)	6.05	14.40	14.40	20.95	20.95	20.95	33.50
BR (rear only)	3.65	6.05	6.05	6.05	6.35	6.35	11.35
EE (each 1/2" each end)	0.80	0.90	1.05	1.25	1.25	1.30	1.75
H	5.35	6.00	7.00	8.60	9.05	9.70	11.30
J (With Standard Seals)	0.30	0.35	0.35	0.40	0.40	0.40	0.45
J (With High Temperature Seals)	0.60	0.85	0.85	1.00	1.00	1.15	3.10
MT, CMT (each end)	4.30	4.75	5.10	7.15	7.75	7.95	9.45
V (With Standard Seals)							
Single Acting	2.15	3.60	5.95	7.95	10.65	14.80	20.15
Reverse Acting	3.05	4.80	7.30	9.40	11.95	16.50	21.95
Double Acting	4.30	6.15	9.85	12.90	16.55	24.25	30.40
Double End Rod	5.00	7.35	11.20	14.40	17.85	26.15	32.35
V (With Low Friction Seals)							
Single Acting	5.90	9.85	12.55	19.75	23.95	27.45	35.70
Reverse Acting	6.65	11.00	13.95	21.20	25.35	29.85	37.45
Double Acting	11.65	18.55	23.10	36.55	43.60	51.10	61.45
Double End Rod	12.40	19.70	24.45	38.15	44.90	52.75	63.25
W							
Single End	7.30	8.90	9.35	11.20	11.20	12.80	13.55
Double End	14.60	17.80	18.65	22.40	22.40	25.60	27.05
L	3.50	4.30	4.80	5.70	6.50	7.70	8.90
Magnetic Piston Sensing (Options M, M1, M4)	6.35	6.35	9.30	15.60	21.95	26.50	29.25
Switch Mounting Post (Options T1, T4)	3.65	3.65	3.65	3.65	3.65	3.65	3.65
Y (Add per 1/8" of stroke)	0.50	0.50	0.50	0.50	0.50	0.50	0.50
Q (With Low Temp Seals)							
Single Acting	2.75	3.45	4.35	5.35	6.70	8.35	10.35
Reverse Acting	3.10	3.80	4.75	5.90	7.30	9.10	11.45
Double Acting	3.15	3.90	4.90	6.10	7.60	9.60	11.90
Double End Rod	3.90	4.90	6.10	7.60	9.60	11.90	14.85
Q (Low Temp w/L Option)							
Single Acting	5.90	7.25	9.05	11.40	14.20	17.75	22.20
Reverse Acting	6.50	8.10	10.05	12.55	15.70	19.60	24.45
Double Acting	6.70	8.35	10.40	13.00	16.35	20.30	25.45
Double End Rod	8.35	10.40	13.00	16.35	20.30	25.45	31.85

No charge options – CFT, G, NT.

Bimba is a JIT manufacturer and we are able to provide FS model cylinders in *ANY 0.001" stroke length increment for all option styles within our standard three-day lead time.* Longer stroke lengths are also available upon request at standard lead times. Please consult Technical Assistance at 800-44-BIMBA for help.

Basic Models

Model FS

(Double Acting, Single End Rod)

**Some options affect cylinder length; see page 2.17.*

***Port location is on the same side for M option only.*

Bore sizes 3/4", 1-1/16", 1-1/2", 2"

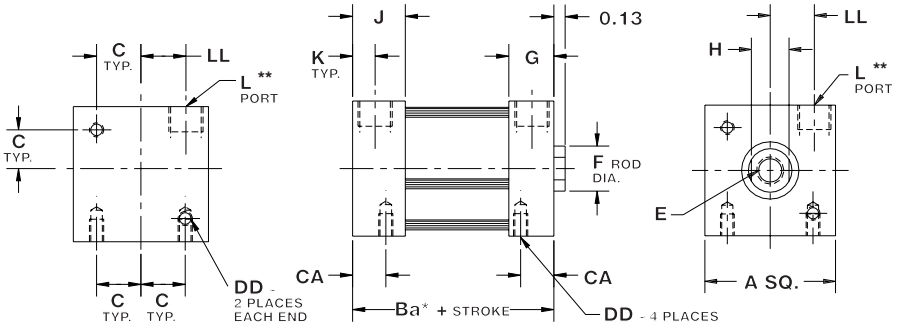

Bore sizes 2-1/2", 3", 4"

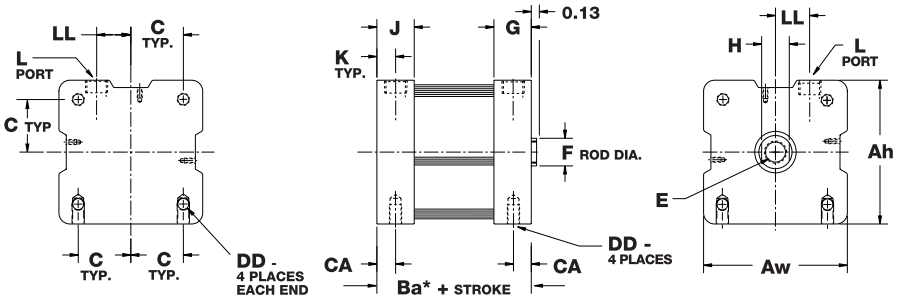

The table below represents our standard stroke lengths. **Blue** stroke lengths are BASIC FS cylinders in stock available for Same Day Shipping.

Nominal Bore Diameter	Bore Code	Standard Stroke Length Availability Blue Stroke Lengths are BASIC, FS Stocked Cylinders Models Available for Same Day Shipping															
3/4"	04	**1/8"**	**1/4"**	**3/8"**	**1/2"**	**5/8"**	**3/4"**	7/8"	**1"**	**1-1/4"**	**1-1/2"**	1-3/4"	**2"**	**2-1/2"**	**3"**	3-1/2"	4"
1-1/16"	09	1/8"	**1/4"**	**3/8"**	**1/2"**	**5/8"**	**3/4"**	7/8"	**1"**	**1-1/4"**	**1-1/2"**	**1-3/4"**	**2"**	**2-1/2"**	**3"**	3-1/2"	4"
1-1/2"	17	1/8"	**1/4"**	**3/8"**	**1/2"**	5/8"	**3/4"**	7/8"	**1"**	**1-1/4"**	**1-1/2"**	1-3/4"	**2"**	**2-1/2"**	**3"**	3-1/2"	**4"**
2"	31	1/8"	1/4"	3/8"	**1/2"**	5/8"	**3/4"**	7/8"	**1"**	**1-1/4"**	**1-1/2"**	1-3/4"	**2"**	**2-1/2"**	**3"**	3-1/2"	**4"**
2-1/2"	50	1/8"	1/4"	3/8"	1/2"	5/8"	3/4"	7/8"	**1"**	1-1/4"	1-1/2"	1-3/4"	2"	2-1/2"	3"	3-1/2"	4"
3"	70	1/8"	1/4"	3/8"	1/2"	5/8"	3/4"	7/8"	1"	1-1/4"	1-1/2"	1-3/4"	2"	2-1/2"	3"	3-1/2"	4"
4"	125	1/8"	1/4"	3/8"	1/2"	5/8"	3/4"	7/8"	1"	1-1/4"	1-1/2"	1-3/4"	2"	2-1/2"	3"	3-1/2"	4"

Basic Models

Model FSD

(Double Acting, Double End Rod)

Standard Strokes
1/8", 1/4", 3/8", 1/2", 5/8", 3/4", 7/8", 1", 1-1/4", 1-1/2", 1-3/4", 2", 2-1/2", 3", 3-1/2", 4"

**Some options affect cylinder length; see page 2.17.*

***Port location is on the same side for M option only.*

Bore sizes 3/4", 1-1/16", 1-1/2", 2"

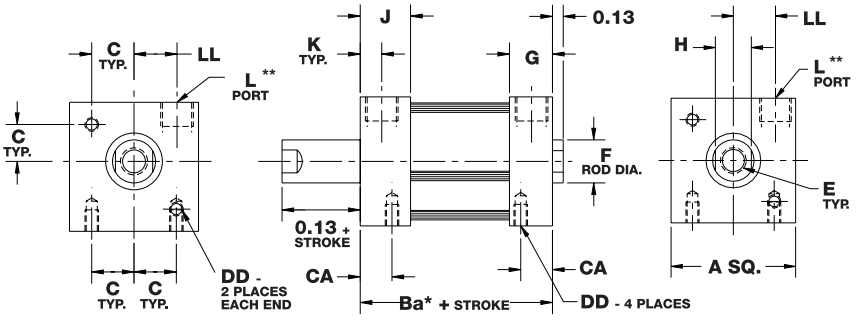

Bore sizes 2-1/2", 3", 4"

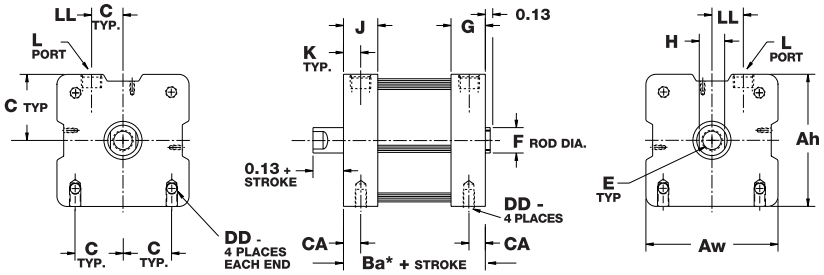

Model FSS

(Single Acting, Spring Return, Rod Normally Retracted)

Standard Strokes
1/8", 1/4", 3/8", 1/2", 5/8", 3/4", 7/8", 1", 1-1/4", 1-1/2", 1-3/4", 2", 2-1/2", 3", 3-1/2", 4"

See page 2.18 for spring forces.

**Some options affect cylinder length; see page 2.17.*

***Port location is on the same side for M option only.*

Bore sizes 3/4", 1-1/16", 1-1/2", 2"

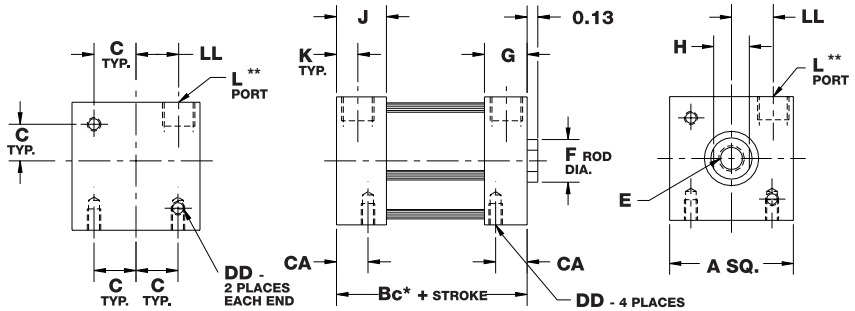

Bore sizes 2-1/2", 3", 4"

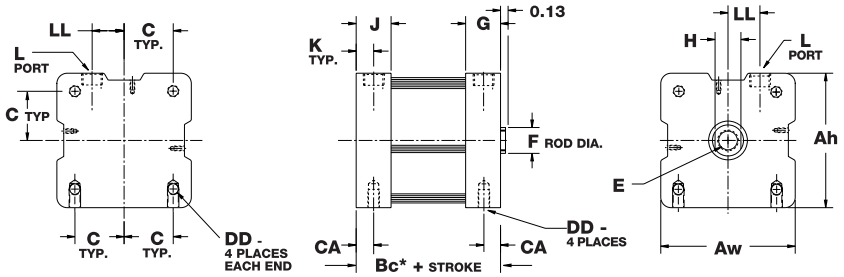

Basic Models

Model FSR

(Reverse Acting, Spring Return, Rod Normally Extended)

Standard Strokes
1/8", 1/4", 3/8", 1/2", 5/8", 3/4", 7/8", 1", 1-1/4", 1-1/2", 1-3/4", 2", 2-1/2", 3", 3-1/2", 4"
2"-4" Bores
3" stroke max

See page 2.18 for spring forces.

**Some options affect cylinder length; see page 2.17.*

Bore sizes 3/4", 1-1/16", 1-1/2", 2"

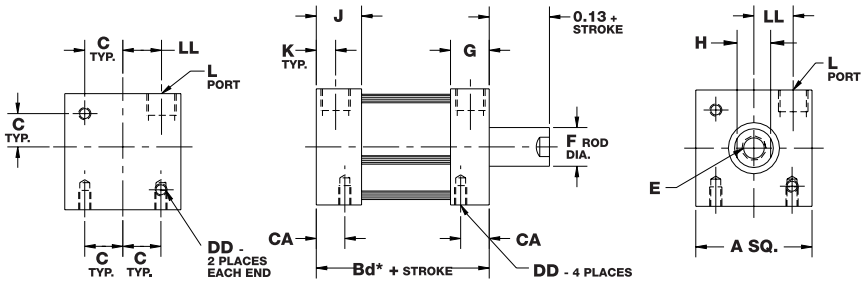

Bore sizes 2-1/2", 3", 4"

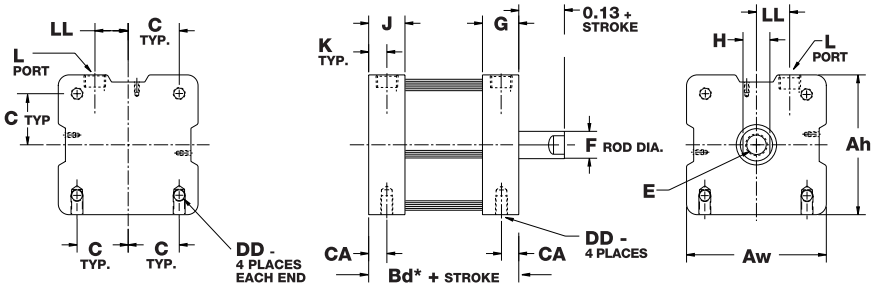

Dimensions (in)

Bore	A	Aw	Ah	Ba*	Bc*				Bd*			
					0-1" Stk	1.001-2" Stk	2.001-3" Stk	3.001-4" Stk	0-1" Stk	1.001-2" Stk	2.001-3" Stk	3.001-4" Stk
3/4" (04)	1.25	N/A	N/A	0.75	1.00	1.56	2.13	2.69	1.25	1.81	2.38	2.94
1-1/16" (09)	1.50	N/A	N/A	1.25	1.25	1.88	2.50	3.13	1.75	2.38	3.00	3.63
1-1/2" (17)	2.00	N/A	N/A	1.25	1.25	1.88	2.50	3.13	1.75	2.38	3.00	3.63
2" (31)	2.5	N/A	N/A	1.31	1.31	1.94	2.56	3.19	1.81	2.44	3.06	N/A
2-1/2" (50)	N/A	3.28	3.25	1.66	1.66	2.54	3.41	4.29	2.39	3.27	3.29	N/A
3" (70)	N/A	3.78	3.75	1.71	1.71	2.58	3.46	4.33	2.44	3.31	3.33	N/A
4" (125)	N/A	5.04	5.00	2.00	2.00	2.88	3.75	4.63	2.75	3.62	3.63	N/A

Bore	C	CA	DD	E Standard	E Coarse	E Depth	F	G	H	J	K	L	LL
3/4" (04)	0.38	0.28	#6-32 UNC	#10-32 UNF	#10-24 UNC	0.46	0.31	0.42	0.25	0.42	0.14	#10-32	0.30
1-1/16" (09)	0.50	0.38	#8-32 UNC	5/16-24 UNF	5/16-18 UNC	0.70	0.50	0.58	0.44	0.50	0.25	1/8 NPT	0.50
1-1/2" (17)	0.69	0.31	#10-24 UNC	3/8-24 UNF	3/8-16 UNC	0.70	0.63	0.58	0.50	0.50	0.25	1/8 NPT	0.69
2" (31)	0.88	0.38	1/4-20 UNC	1/2-20 UNF	1/2-13 UNC	0.70	0.75	0.63	0.63	0.63	0.25	1/8 NPT	0.77
2-1/2" (50)	1.18	0.42	5/16-18	1/2-20 UNF	1/2-13 UNC	0.70	0.75	0.84	0.62	0.84	0.42	1/4 NPT	0.78
3" (70)	1.44	0.44	5/16-18	5/8-18 UNF	5/8-11 UNC	0.73	0.88	0.88	0.75	0.88	0.44	1/4 NPT	0.98
4" (125)	1.81	0.50	7/16-14	3/4-16 UNF	3/4-10 UNC	0.83	1.00	1.00	0.88	1.00	0.50	3/8 NPT	1.25

**See page 2.17 for length adders for options.*

Mounting Options

Pivot Mount

The pivot mount option is available as shown or rotated 90˚ to port and can be ordered as a separate mounting attachment.

See page 2.43 for dimensions.

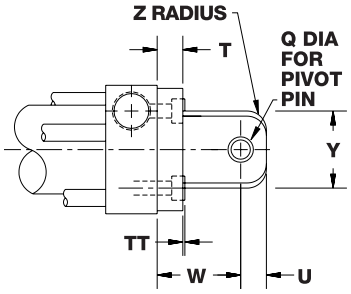

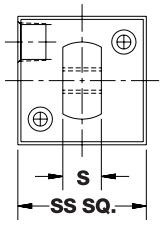

Length Adder Dimensions for Options

(Dimensional variations from standard as shown.)

Bore	Length Adder		
	Low Friction Seals (L)	Magnetic Position Sensing* (M)	Low Friction Seals and Magnetic Position Sensing
3/4" (04)	0.25	0.75	0.75
1-1/16" (09)	0.38	0.50	0.50
1-1/2" (17)	0.38	0.63	0.63
2" (31)	0.38	0.63	0.63
2-1/2" (50)	0.38	0.88	0.88
3" (70)	0.50	0.88	0.88
4" (125)	0.50	0.88	0.88

**A minimum stroke of 0.38" is required to sense extending end-of-stroke position. For port locations with Option-M, see page 2.26.*

Options

Rod Wiper (Option W)

(Buna N standard, not available in Viton)

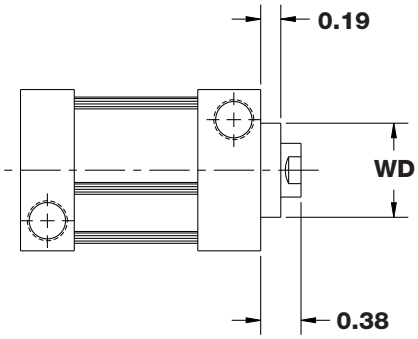

Bore	WD
3/4" (04)	0.69
1-1/16" (09)	0.88
1-1/2" (17)	1.00
2" (31)	1.12
2-1/2" (50)	1.13
3" (70)	1.25
4" (125)	1.38

Male Rod Ends (Option MT or CMT)

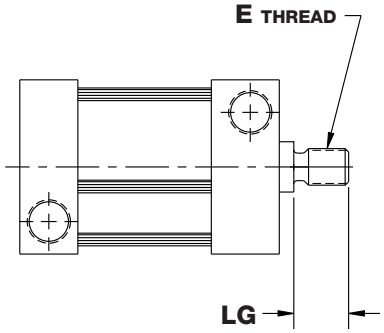

Bore	E		LG
	MT	CMT	
3/4" (04)	#10-32 UNF	#10-24 UNC	0.38
1-1/16" (09)	5/16-24 UNF	5/16-18 UNC	0.50
1-1/2" (17)	3/8-24 UNF	3/8-16 UNC	0.50
2" (31)	1/2-20 UNF	1/2-13 UNC	0.62
2-1/2" (50)	1/2-20 UNF	1/2-13 UNC	0.63
3" (70)	5/8-18 UNF	5/8-11 UNC	0.75
4" (125)	3/4-16 UNF	3/4-10 UNC	0.75

Options

Enclosed Spring Forces

Bore	Maximum Force (lb)	Spring Rate			
		0.12 to 1" Stroke (lb/in)	1.001 to 2" Stroke (lb/in)	2.001 to 3" Stroke (lb/in)	3.001 to 4" Stroke (lb/in)
3/4" (04)	10	6	2.5	1.76	1.25
1-1/16" (09)	11.5	6	2.5	1.76	1.25
1-1/2" (17), 2" (31)	13	5.5	2.25	1.60	1.13
2-1/2" (50), 3" (70), 4" (125)	25	6.5	2.75	1.93	1.38

FSD Hollow Rods (Option H)

Bore	Hole Diameter	
	Female Rod Thread	Male Rod Thread
3/4" (04)	0.14	0.09
1-1/16" (09)	0.22	0.16
1-1/2" (17)	0.28	0.19
2" (31)	0.38	0.25
2-1/2" (50)	0.38	0.25
3" (70)	0.44	0.31
4" (125)	0.50	0.38

Repair Kits

Single End Rod Kits

Basic Repair Kit (K-B-FS-__)*		
Part No.	Description	Quantity
PF-1	Rod Seal	1
PF-2	Piston Seal	1
PF-41	Tube Seal	2
PF-4	Bushing	2

Wiper Option Basic Repair Kit (K-B-FS-W-__)*		
Part No.	Description	Quantity
PF-1	Rod Seal	1
PF-2	Piston Seal	1
PF-41	Tube Seal	2
PF-4	Bushing	1
PF-5	Wiper Bushing	1
PF-6	Wiper	1

Double End Rod Kits

Basic Repair Kit (K-B-FSD-__)*		
Part No.	Description	Quantity
PF-1	Rod Seal	2
PF-2	Piston Seal	1
PF-41	Tube Seal	2
PF-4**	Bushing	3

Wiper Option Basic Repair Kit (K-B-FSD-W-__)*		
Part No.	Description	Quantity
PF-1	Rod Seal	2
PF-2	Piston Seal	1
PF-41	Tube Seal	2
PF-4**	Bushing	1
PF-5	Wiper Bushing	2
PF-6	Wiper	2

**Must specify bore size when ordered. Contact your local BIMBA Distributor for pricing on kits and other repair parts.*

***Note: On FSD (Double Acting, Double End Rod) models, two bushings are provided on the head end with tie rod nuts. Opposite head end has one bushing.*

Weights

Bore	Approximate Cylinder Weights (oz.)						
	FS, FSS		FSD			FSR	
	Base	Adder per 1/8" of stroke	Base	Adder per 1/8" of stroke	Adder per 1/8" of stroke for -H option	Base	Adder per 1/8" of stroke
3/4" (04)	2.2	0.1	2.4	0.2	0.15	2.2	0.1
1-1/16" (09)	5.1	0.2	5.7	0.4	0.3	5.5	0.2
1-1/2" (17)	10.1	0.3	10.5	0.6	0.5	10.4	0.3
2" (31)	14.2	0.4	16.0	0.8	0.6	15.0	0.4
2-1/2" (50)	28.6	0.4	34.2	0.6	0.5	31.2	0.4
3" (70)	40.2	0.6	49.3	0.9	0.7	43.8	0.6
4" (125)	71.6	0.6	87.7	0.9	0.7	77.7	0.6

Flat-II nonrotating, double-acting cylinder provides the answer to applications where rotation cannot be tolerated and space is at a minimum. Nonrotation is achieved with dual piston rods and a rod end block that insures the rods work in tandem. Flat-II eliminates the need for external alignment devices, such as guides, rods and alignment posts or pins.

- Body — 304 Stainless Steel
- Heads — Anodized Aluminum Alloy
- Piston Rod — Ground and Polished 303 Stainless Steel
- Piston Seals — Buna N (High temperature seals optional)
- Rod Bushing — Oil Impregnated Bronze
- Rod Seals — Buna N O-ring (High temperature seals optional)
- Rod End Block — Anodized Aluminum Alloy
- Pressure Rating — 200 PSI Maximum (Air only)
- Temperature Rating — From -20˚F to +150˚F (-25˚C to +65˚C) Buna N seals with a temperature range of -20˚F to +150˚F (-25˚C to +65˚C) are standard in all Bimba air cylinders. Fluoroelastomer seals rated for higher temperature applications are available. If cylinders are operated below 0˚F (-18˚C) for extended time periods, special modifications may be required. Special seal materials are available upon request.

How to Order

The Model Number for all Flat-II cylinders consists of three alphanumeric clusters. These designate type, bore size and stroke length, and mounting and special options. Please refer to the charts below for an example of Model Number FT-040.375-1CE. This is a nonrotating, double-acting, 3/4" bore, 3/8" stroke, pivot mount cylinder with counterbored mounting holes in the rod end block.

TYPE

FT – Nonrotating, Double Acting

BORE SIZE

04 – 3/4"
09 – 1-1/16"
17 – 1-1/2"
31 – 2"

STROKE LENGTH

0.125 - 1/8"
0.25 - 1/4"
0.375 - 3/8"
ETC.

FT-040.375-1 C E

MOUNTING OPTIONS

(Enter in numeric order)

No Number	Basic model (Standard counterbored mounting holes)
1	Pivot mount
1N	Pivot mount 90˚ from standard
2	Trunnion mount, both ends
2F	Front trunnion mount
2R	Rear trunnion mount
3	Threaded mounting holes, both ends
3F	Threaded mounting holes, front
3R	Threaded mounting holes, rear
4	Screw clearance holes, both ends[1]
4F	Screw clearance holes, front[1]
4R	Screw clearance holes, rear[1]

[1] "Screw clearance" to allow bolt head to pass through; no counter bores (see page 2.21).

OPTIONS

(Enter in alphabetical order, except for EE which is last)

CE	Counter bored rod end block (see page 2.22)
G	Magnalube® G
K	Endblock rotated 90 degrees
M, M1, M3, M4	Magnetic position sensing (see table page 2.9[1], 2.10, and Switch Products Section)
P3	Front port position (see page 2.21)
Q	Low temperature option (-40°F to 200°F)
S	Stainless steel fasteners (125 PSI maximum pressure rating – air only)
T1, T3, T4	Additional switch mounting post located in position #1, 3 or 4
V	High temperature option (0°F to 400°F)[1]
Y	Moly-coat (MoS_2 I. D. coating)
EE0.375	3/8" extra rod extension, etc.
EE1	1" extra rod extension, etc.

[1] If magnetic position sensing is specified with option V, standard Buna-N based magnet will be provided. Magnetic position sensing is not reliable above 200°F. Overall cylinder length increases with the magnet option.

Price List

Basic Model	Base Price by Bore Size			
	3/4"	1-1/16"	1-1/2"	2"
Base Model	$63.05	$82.65	$97.90	$113.15
Adder per 1/8" of stroke	0.45	0.55	0.85	1.10

Mounting Options	Price Adders by Bore Size			
	3/4"	1-1/16"	1-1/2"	2"
Pivot Mount (Options 1, 1N)	$11.85	$13.80	$18.65	$21.65
Trunnion Mount (Options 2, 2F, 2R)	9.90 per end	9.90 per end	9.90 per end	9.90 per end
Threaded Mounting Holes (Options 3, 3F, 3R)	3.20 per end	3.40 per end	4.20 per end	4.20 per end
Screw Clearance Holes (Options 4, 4F, 4R)	2.60 per end	2.60 per end	2.60 per end	2.60 per end

Options	Price Adders by Bore Size			
	3/4"	1-1/16"	1-1/2"	2"
EE (each 1/2" each end)	$0.85	$0.95	$1.10	$1.40
Magnetic Position Sensing (Options M, M1, M3, M4)	6.35	6.35	9.40	15.60
S	2.20	2.20	2.55	2.55
Switch Mounting Post (Options T1, T3, T4)	2.40	3.15	3.15	3.15
High Temperature Seals (Option V)	12.70	20.00	24.85	38.60
Y (Adder per 1/8" of stroke)	0.50	0.50	0.50	0.50
Q (low temp seals)	11.60	14.45	18.20	22.75

No charge options – CE, G, K, P3.

Repair Kits

Basic Repair Kit (K-B-FT-__)*		
Part No.	Description	Quantity
PF-29	Rod Seal	2
PF-30	Piston Seal	2
PF-3	Tube Seal	2
PF-31	Bushing	4

**Must specify bore size when ordered.*
Contact your local BIMBA Distributor for pricing on kits and other repair parts.

Weights

Bore	Approximate Cylinder Weights (oz.)	
	Base	Adder per 1/8" of stroke
3/4" (04)	2.7	0.1
1-1/16" (09)	6.4	0.5
1-1/2" (17)	12.2	0.7
2" (31)	18.4	0.9

Bimba is a JIT manufacturer and we are able to provide FT model cylinders in *ANY 0.001" stroke length increment for all option styles within our standard three-day lead time.* Longer stroke lengths are also available upon request at standard lead times. Please consult Technical Assistance at 800-44-BIMBA for help.

Basic Model

Model FT

(Nonrotating, double acting)

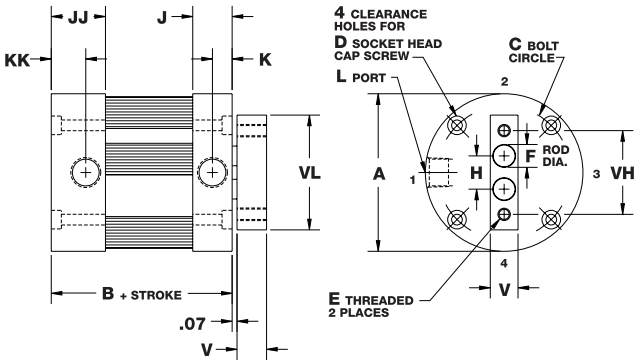

The table below represents our standard stroke lengths. **Blue** stroke lengths are BASIC FT cylinders in stock available for Same Day Shipping.

Nominal Bore Diameter	Bore Code	Standard Stroke Length Availability															
3/4"	04	1/8"	**1/4"**	**3/8"**	**1/2"**	5/8"	**3/4"**	7/8"	**1"**	1-1/4"	**1-1/2"**	1-3/4"	**2"**	2-1/2"	3"	3-1/2"	4"
1-1/16"	09	1/8"	1/4"	3/8"	**1/2"**	5/8"	**3/4"**	7/8"	**1"**	1-1/4"	**1-1/2"**	1-3/4"	**2"**	2-1/2"	**3"**	3-1/2"	**4"**
1-1/2"	17	1/8"	1/4"	3/8"	**1/2"**	5/8"	3/4"	7/8"	**1"**	**1-1/4"**	**1-1/2"**	1-3/4"	**2"**	2-1/2"	**3"**	3-1/2"	**4"**
2"	31	1/8"	1/4"	3/8"	**1/2"**	5/8"	3/4"	7/8"	**1"**	1-1/4"	**1-1/2"**	1-3/4"	**2"**	2-1/2"	**3"**	3-1/2"	**4"**

Mounting Options

Trunnion Mount

(rear, front or both) (-2R shown)

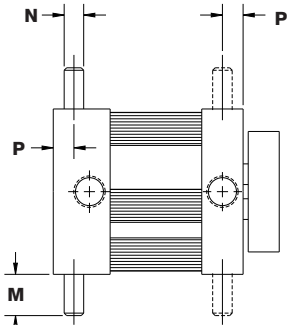

Pivot Mount

(complete with bronze bushing)
(-1 shown)

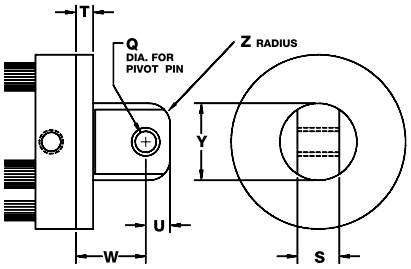

Threaded Mounting Holes

(available either or both ends)
(-3R shown)

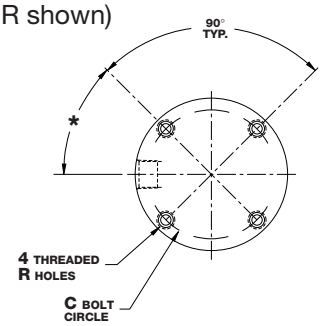

**43° 3/4" bore only. 45° all other bores.*

Screw Clearance Holes

(available either or both ends)
(-4R shown)

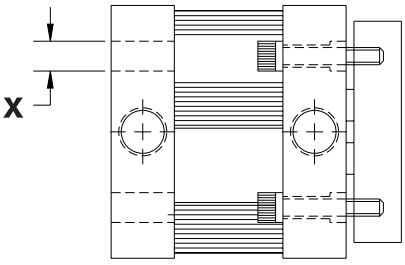

Dimensions (in)

Counterbored Rod End Block

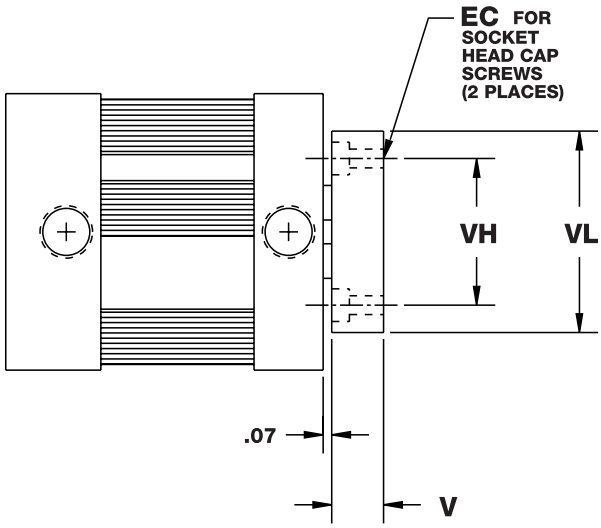

Bore	A	B*	C	D	E	EC	F	H
3/4" (04)	1.50	0.94	1.22	#6	#6-32 UNC	#6	0.19	0.332
1-1/16" (09)	2.00	1.31	1.69	#6	#8-32 UNC	#8	0.25	0.422
1-1/2" (17)	2.63	1.31	2.19	#10	1/4-20 UNC	1/4	0.38	0.562
2" (31)	3.13	1.38	2.69	#10	5/16-18 UNC	5/16	0.50	0.750

Bore	J	JJ	K	KK	L	M	N	P	Q	R
3/4" (04)	0.34	0.47	0.14	0.27	#10-32	0.31	0.13	0.17	0.19	#6-32 UNC
1-1/16" (09)	0.50	0.69	0.25	0.44	1/8 NPT	0.50	0.25	0.25	0.19	#6-32 UNC
1-1/2" (17)	0.50	0.69	0.25	0.44	1/8 NPT	0.50	0.25	0.25	0.38	#10-24 UNC
2" (31)	0.53	0.72	0.25	0.44	1/8 NPT	0.50	0.25	0.25	0.38	#10-24 UNC

Bore	S	T	U	V	VL	VH	W	X	Y	Z
3/4" (04)	0.38	0.19	0.25	0.38	1.25	0.88	0.75	0.23	0.75	0.19
1-1/16" (09)	0.38	0.25	0.25	0.38	1.44	1.06	0.81	0.25	0.75	0.19
1-1/2" (17)	0.75	0.25	0.44	0.50	2.00	1.50	1.19	0.34	1.38	0.38
2" (31)	0.75	0.31	0.44	0.63	2.50	1.88	1.25	0.34	1.38	0.38

**Magnetic Position Sensing Length Adder: 0.63.*
A minimum stroke of 0.38" is required to sense extending end-of-stroke position.

Nonrotation is achieved through the use of dual piston rods incorporated into the body of the Flat-II cylinder. The rods are securely attached to the piston by our unique spin-riveting process. A rod end block is used to insure the rods work in tandem—as a team. This end block also acts as a useful surface to easily accommodate any mounting attachments required to get the job done. For mounting convenience, the rod end block is provided with threaded mounting holes or optional counterbored holes.

As with any cylinder application, side loading should be avoided. The two smaller rods will have more deflection due to side load than the one standard rod in a comparable Flat-1 model.

The Flat-II is intended to work satisfactorily against pure torsional loads.
The maximum torsional load per bore size is shown in the following table:

Bore	3/4" (04)	1-1/16" (09)	1-1/2" (17)	2" (31)
Torque (in-lb)	0.3	1	5	10
K	5.21	26.61	238.85	1344.63

The amount of angular deflection, in degrees, can be approximated by the following formula:

$$Ø = \frac{TL^3}{K}$$

Where
T = Torque (in.-lb.)
L = Length (see sketch below)
K = Per chart above
Ø = Angular deflection

Note: To prevent rod distortion, the rod end block must be fastened securely.

Rotational Tolerance

Bore	Maximum Rotation
3/4" (04)	±1°
1-1/16" (09)	±3/4°
1-1/2" (17)	±1/2°
2" (31)	±1/2°

Deflection L Value

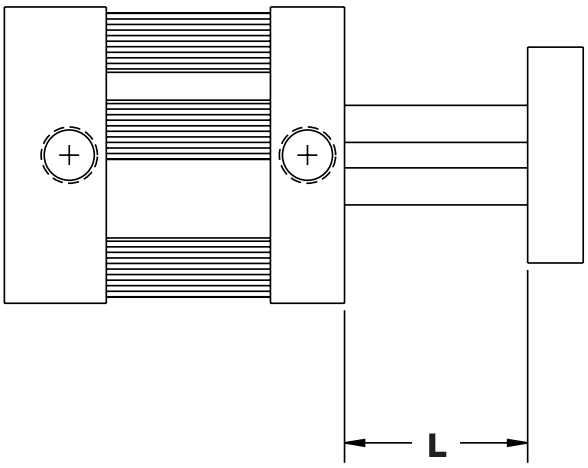

Bimba Square FLAT-II

Square Flat-II nonrotating, double acting cylinder provides the answer to applications where rotation cannot be tolerated. Nonrotation is achieved with dual piston rods and a rod end block that insures the rods work in tandem. Square Flat-II eliminates the need for external alignment devices. It also provides a convenient alternative for horizontal and side mounting, with provisions for both bottom flush or face mounting. Centerline distances are minimized, facilitating side-by-side cylinder mounting.

- Body — 304 Stainless Steel
- Heads — Anodized Aluminum Alloy
- Piston Rod — Ground and Polished 303 Stainless Steel
- Piston Seals — Buna N (High temperature seals optional)
- Rod Bushing — Bronze
- Rod Seals — Buna N Block V (High temperature seals optional)
- Tie Rods — 303 Stainless Steel
- Rod End Block — Anodized Aluminum Alloy
- Pressure Rating — 200 PSI Maximum (Air only)
- Temperature Rating — From -20˚F to +150˚F (-25˚C to +65˚C) Buna N seals with a temperature range of -20˚F to +150˚F (-25˚C to +65˚C) are standard in all Bimba air cylinders. Fluoroelastomer seals rated for higher temperature applications are available. If cylinders are operated below 0˚F (-18˚C) for extended time periods, special modifications may be required. Special seal materials are available upon request.

How to Order

The Model Number for all Square Flat-II cylinders consists of three alphanumeric clusters. These designate type, bore size and stroke length, mounting and special options. Please refer to the charts below for an example of Model Number FST-170.125-1V. This is a nonrotating, double acting, 1-1/2" bore, 1/8" stroke, pivot mount cylinder with high temperature seals.

TYPE

FST – Nonrotating, Double Acting

BORE SIZE

04 – 3/4"
09 – 1-1/16"
17 – 1-1/2"
31 – 2"

STROKE LENGTH

0.125 - 1/8"
0.25 - 1/4"
0.375 - 3/8"
ETC.

FST-170.125-1 V

MOUNTING OPTIONS

No Number - Basic model
1 - Pivot mount
1N - Pivot mount 90˚ from standard

OPTIONS

(Enter in alphabetical order, except for EE which is last)

CE – Counterbored Endblock
G – Magnalube® G
K – Endblock rotated 90 degrees (see page 2.28)
L – Low Friction Seals (see page 2.27)
M, M1, M4 – Magnetic Position Sensing (see page 2.27[1] and Switch Products Section)
Q – Low temperature option (-40°F to 200°F)
T1, T4 – Additional switch track located in position #1 or 4
V – High temperature option (0°F to 400°F)[1]
Y – Moly-coat (MoS_2 I. D. coating)
EE0.375 – 3/8" extra rod extension, etc.
EE1 – 1" extra rod extension, etc.

[1] If magnetic position sensing is specified with option V, standard Buna-N based magnet will be provided. Magnetic position sensing is not reliable above 200°F. Overall cylinder length increases with the magnet option.

Price List

Basic Model	Base Price by Bore Size			
	3/4" (04)	1-1/16" (09)	1-1/2" (17)	2" (31)
Base Model	$72.80	$93.40	$110.95	$127.95
Adder per 1/8" of Stroke	0.45	0.60	0.85	1.10
Mounting Options	**Price Adders by Bore Size**			
	3/4" (04)	1-1/16" (09)	1-1/2" (17)	2" (31)
Pivot Mount (Options 1, 1N)	$15.60	$17.05	$21.55	$24.15
Options	**Price Adders by Bore Size**			
	3/4" (04)	1-1/16" (09)	1-1/2" (17)	2" (31)
EE (each 1/2" each end)	$0.85	$0.95	$1.10	$1.40
V Option (Standard Seals)	5.00	7.35	11.20	14.40
V Option (Low Friction Seals)	12.70	20.00	24.85	38.60
L (Low Friction Seals)	3.50	4.30	4.80	5.70
Magnetic Position Sensing (Options M, M1, M3, M4)	6.35	6.35	9.40	15.60
Switch Mounting Post (Options T1, T4) (Per post)	3.65	3.65	3.65	3.65
Q Option (Standard Seals)	5.45	6.80	8.50	10.60
Q Option (Low Friction Seals)	11.60	14.45	18.20	22.75
Y (Adder per 1/8" of stroke)	0.50	0.50	0.50	0.50

No Charge Options – CE, G, K.

Basic Model

Model FST

(Nonrotating, double acting)

Standard Strokes
1/8", 1/4", 3/8", 1/2", 5/8", 3/4", 7/8", 1", 1-1/4", 1-1/2", 1-3/4", 2", 2-1/2", 3", 3-1/2", 4"

**Some options affect cylinder length; see page 2.27.*

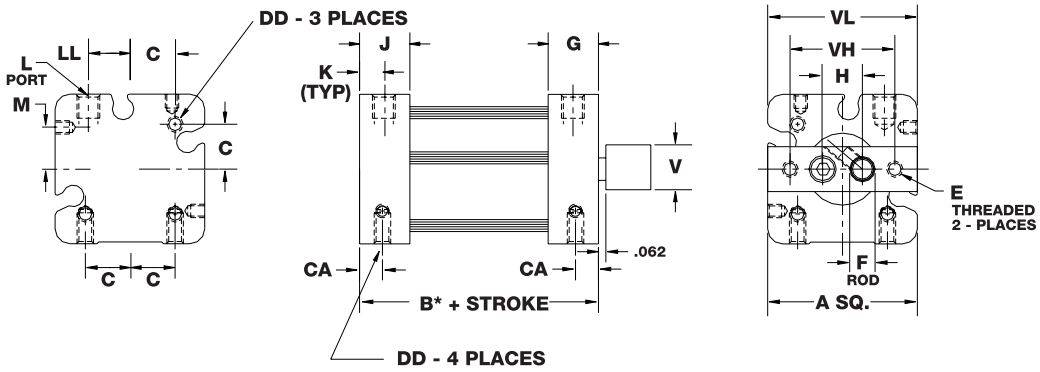

Counterbored Rod End Block

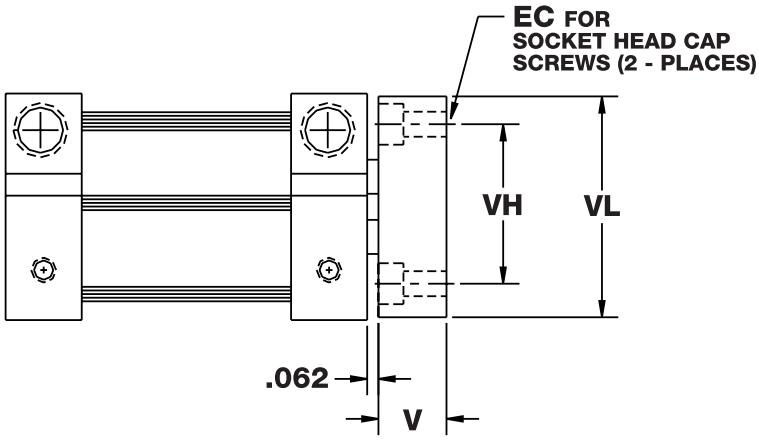

Dimensions (in)

Bore	A	B	C	CA	DD	E	EC	F	G	H
3/4" (04)	1.25	0.75	0.38	0.28	#6-32 UNC	#6-32 UNC	#6	0.19	0.42	0.332
1-1/16" (09)	1.50	1.25	0.50	0.38	#8-32 UNC	#8-32 UNC	#8	0.25	0.58	0.422
1-1/2" (17)	2.00	1.25	0.69	0.31	#10-24 UNC	1/4-20 UNC	1/4	0.38	0.58	0.562
2" (31)	2.50	1.31	0.88	0.38	#1/4-20 UNC	5/16-18 UNC	5/16	0.50	0.62	0.750

Bore	J	K	L	LL	M	V	VH	VL
3/4" (04)	0.42	0.19	#10-32	0.35	0.349	0.38	0.88	1.25
1-1/16" (09)	0.50	0.25	1/8 NPT	0.45	0.321	0.38	1.06	1.44
1-1/2" (17)	0.50	0.25	1/8 NPT	0.60	0.200	0.50	1.50	2.00
2" (31)	0.62	0.25	1/8 NPT	0.76	0.186	0.63	1.88	2.50

A minimum stroke of .38" is required to sense extending end-of-stroke position.
See page 2.27 for length adders for magnet option.

Repair Kits

Basic Repair Kit (K-B-FST-__)*		
Part No.	Description	Quantity
PF-29-FST	Rod Seal	2
PF-30-FST	Piston Seal	1
PF-3-FST	Tube Seal	2

**Must specify bore size to order.*

Weights

Bore	Approximate Cylinder Weights (oz.)	
	Base	Adder per 1/8" of stroke
3/4" (04)	2.7	0.1
1-1/16" (09)	6.4	0.5
1-1/2" (17)	12.2	0.7
2" (31)	18.4	0.9

Length Adder Dimensions for Options

Bore	Length Adder		
	Low Friction Seals (L)	Magnetic Position Sensing* (M)	Low Friction Seals and Magnetic Position Sensing
3/4" (04)	0.25	0.75	0.75
1-1/16" (09)	0.25	0.50	0.50
1-1/2" (17)	0.25	0.63	0.63
2" (31)	0.25	0.63	0.63

**A minimum stroke of 0.38" is required to sense extending end-of-stroke position.*

MRS Switch Option Dimensions

For all SQUARE Flat-1 Series Cylinder -M option, the default switch mounting post location is Position 2. To locate the post to other positions, please specify options M1 or M4. For additional tracks, please specify options T1 or T4 for the appropriate location.

Square Flat-1

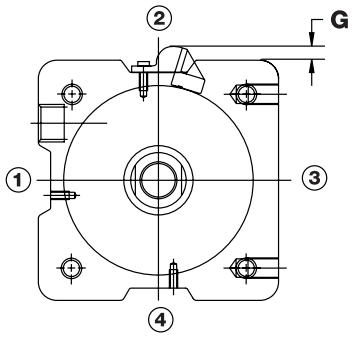

Square Flat-II

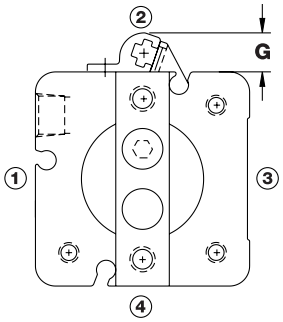

Bore Designator	Bore	G inch (mm)
04*	3/4" (19mm)	0.365 (9.3)
09	1-1/16" (27mm)	0.365 (9.3)
17	1-1/2" (38mm)	0.365 (9.3)
31	2" (50mm)	0.365 (9.3)
50	2-1/2" (63mm)	0.270 (6.9)
70	3" (76mm)	0.300 (7.6)
125	4" (101mm)	0.160 (4.1)

*Note: Option combinations MT1 and M1T4 cannot be ordered in combination due to interference concerns.

Nonrotation is achieved through the use of dual piston rods incorporated into the body of the Flat-II cylinder. The rods are securely attached to the piston by our unique spin-riveting process. A rod end block is used to insure the rods work in tandem—as a team. This end block also acts as a useful surface to easily accommodate any mounting attachments required to get the job done. For mounting convenience, the rod end block is provided with threaded mounting holes or optional counterbored holes.

As with any cylinder application, side loading should be avoided (see option K below). The two smaller rods will have more deflection due to side load than the one standard rod in a comparable Flat-I model.

The Flat-II is intended to work satisfactorily against pure torsional loads.
The maximum torsional load per bore size is shown in the following table:

Bore	3/4" (04)	1-1/16" (09)	1-1/2" (17)	2" (31)
Torque (in-lb)	0.3	1	5	10
K	5.21	26.61	238.85	1344.63

The amount of angular deflection, in degrees, can be approximated by the following formula:

$$Ø = \frac{TL^3}{K}$$

Where
T = Torque (in.-lb.)
L = Length (see sketch below)
K = Per chart above
Ø = Angular deflection

Note: To prevent rod distortion, the rod end block must be fastened securely.

Rotational Tolerance

Bore	Maximum Rotation
3/4" (04)	±1°
1-1/16" (09)	±3/4°
1-1/2" (17)	±1/2°
2" (31)	±1/2°

Deflection L Value

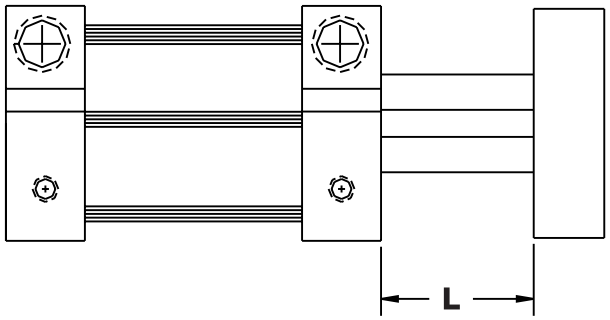

L = .062 + STROKE

Option K - Endblock Rotated 90°

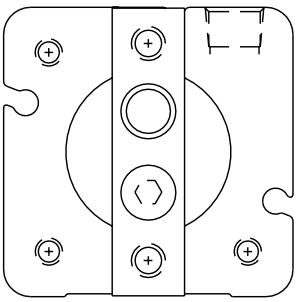

Bimba FO2 FO3 FO4

Space-Saving Cylinders That Multiply Force Output

The Bimba FO2, FO3, FO4 Series Flat-I are double-acting, single end rod cylinders that multiply the force output by supplying air to multiple pistons on extension. They save space and eliminate the need for a higher pressure system. Only one piston is powered on the return stroke, saving air volume and operating costs.

- Body — 304 Stainless Steel
- Heads — Anodized Aluminum Alloy
- Piston Rod — Ground and Polished 303 Stainless Steel
- Seals — Buna N (High temperature seals optional)
- Rod Bushing — Oil Impregnated Bronze
- Pressure Rating — 100 PSI Maximum (Air only)
- Temperature Rating — From -20˚F to +150˚F (-25˚C to +65˚C)
  Buna N seals with a temperature range of -20˚F to +150˚F (-25˚C to +65˚C) are standard in all Bimba air cylinders. Fluoroelastomer seals rated for higher temperature applications are available. If cylinders are operated below 0˚F (-18˚C) for extended time periods, special modifications may be required. Special seal materials are available upon request.

How it Works

Extension-air supplied to multiple pistons

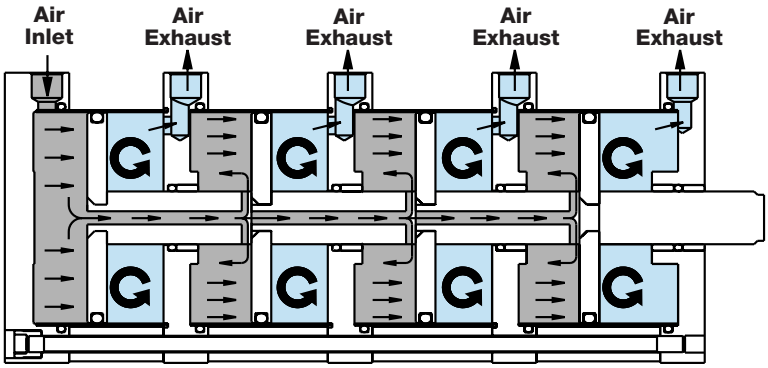

Retraction-air supplied to one piston only

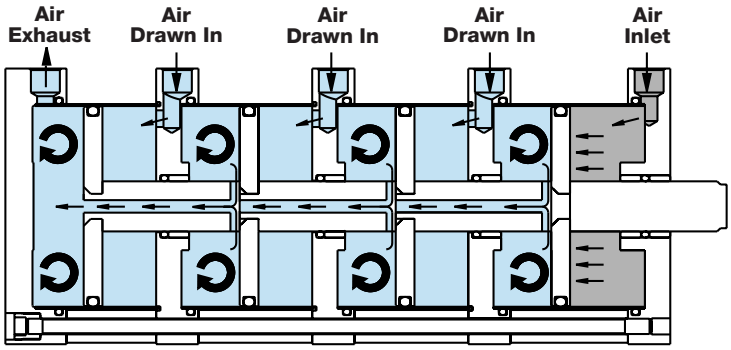

How to Order

The model number for all FO2, FO3 and FO4 Series Flat-I cylinders consists of three alphanumeric clusters. These designate type, bore size and stroke length, and mounting and special options. Please refer to the charts below for our example of Model Number FO2-501-3M. This is a 2-1/2" bore FO2 Series Flat-I with 1" stroke, threaded mounting holes in both ends, with the magnetic position sensing option.

TYPE

FO2 – 2 Stage Extend, Single Stage Retract
FO3 – 3 Stage Extend, Single Stage Retract
FO4 – 4 Stage Extend, Single Stage Retract

BORE SIZE

50 – 2-1/2"
70 – 3"
125 – 4"

STROKE LENGTH

0.25 - 1/4"
1 - 1"
ETC.

FO2-501-3 M

MOUNTING OPTIONS

(Enter in numeric order)

No Number - Basic model (Standard counterbored mounting holes)
3 - Threaded mounting holes, both ends
3F - Threaded mounting holes, front
3R - Threaded mounting holes, rear
4 - Screw clearance holes, both ends[1]
4F - Screw clearance holes, front[1]
4R - Screw clearance holes, rear[1]

[1] "Screw clearance" to allow bolt head to pass through; no counter bores (see page 2.32).

OPTIONS

(Enter in alphabetical order, except for EE which is last)

CFT – Coarse female thread (fine thread standard) (see page 2.32)
CMT – Male rod end (coarse thread) (see page 2.34)
G – Magnalube® G
L – Low friction seals (see page 2.34)
M, M1, M3, M4 – Magnetic position sensing[1]
MT – Male rod end (fine thread) (see page 2.34)
NT – Non-threaded rod
P2, P3, P4 – Front port position #2, etc. (see page 2.33)
P6, P7, P8 – Rear port position #6, etc. (see page 2.33)
Q – Low temperature option (-40°F to 200°F)
T1, T3, T4 – Additional switch mounting post located in position #1, 3 or 4
V – High temperature option (0°F to 400°F)
W – Rod wiper (Buna N only) (see page 2.34)
Y – Moly-coat (MoS_2 I. D. coating)
EE0.375 – 3/8" extra rod extension, etc.
EE1 – 1" extra rod extension, etc.

[1] If magnetic position sensing is specified with option V, standard Buna-N based magnet will be provided. Magnetic position sensing is not reliable above 200°F.

Approximate Power Factors					
Bore	Bore Model Designator	Power Factor Extension			Power Factor Retraction
		F02	F03	F04	
2-1/2" (50)	50	9.4	13.8	18.3	4.5
3" (70)	70	13.5	20.0	26.5	6.5
4" (125)	125	24.3	36.1	47.9	11.8

Multiply the air line pressure by the power factor to get the approximate force. For example, an FO2-501-3 operated at 80 PSI will exert a force of 752 lbs. on extension, and 360 lbs. on retraction.

List Prices

Basic Model	Base Price by Bore Size		
	2-1/2"	3"	4"
FO2	$155.70	$194.45	$282.40
Adder per 1/8" of Stroke	2.55	3.35	4.00
FO3	223.90	266.70	355.05
Adder per 1/8" of Stroke	3.85	4.40	4.90
FO4	272.95	325.20	433.85
Adder per 1/8" of Stroke	4.80	5.20	5.90

Mounting Options	Base Price by Bore Size		
	2-1/2"	3"	4"
Threaded Mounting Holes (Options 3, 3F, 3R)	$4.80 per end	$4.80 per end	$5.90 per end
Screw Clearance Holes (Options 4, 4F, 4R)	2.60 per end	2.60 per end	2.60 per end

No charge options – CFT, G, NT, P2, P3, P4, P6, P7, P8.

Options		Adders by Bore Size		
		2-1/2"	3"	4"
EE (per 1/2" increments)		$ 1.20	$ 1.30	$ 1.90
L (Low Friction Seals)	FO2	13.35	15.50	18.00
	FO3	19.85	23.20	26.95
	FO4	26.45	30.85	35.95
Magnet Position Sensing (Options M, M1, M3, M4)		23.30	28.05	30.90
MT, CMT (Male Rod)		7.15	8.45	10.05
Switch Mounting Post (Options T1, T3, T4) (per post)		5.75	5.75	5.75
V - High Temperature (Fluoroelastomer Seals)	FO2	21.90	32.00	40.15
	FO3	32.80	48.00	60.25
	FO4	43.65	64.00	80.35
V - High Temperature (with L Option)	FO2	57.70	67.75	81.45
	FO3	86.50	101.40	122.00
	FO4	115.35	135.20	162.70
W (Wiper)		11.70	13.55	14.30
Y (Adder per 1/8" of stroke)	FO2	0.90	0.90	0.90
	FO3	1.20	1.20	1.20
	FO4	1.60	1.60	1.60
Q - Low Temperature	FO2	13.30	16.55	20.80
	FO3	23.25	28.95	36.25
	FO4	40.55	50.60	63.40
Q - Low Temperature (with Option L)	FO2	28.50	35.60	44.50
	FO3	49.80	62.10	77.85
	FO4	87.05	108.70	136.15

Repair Kits

Basic Repair Kit (K-B-FO-__)*		
Part No.	Description	Quantity**
PF-1	Rod Seal	2, 3 or 4
PF-2	Piston Seal	2, 3 or 4
PF-3	Tube Seal	3, 4 or 5
PF-4	Bushing	3, 4 or 5

**Must specify model and bore size when ordered.*
***Quantities listed correspond with FO2, FO3 or FO4.*

Wiper Option Repair Kit (K-B-FO-__-W)*		
Part No.	Description	Quantity**
PF-1	Rod Seal	2, 3 or 4
PF-2	Piston Seal	2, 3 or 4
PF-3	Tube Seal	3, 4 or 5
PF-4	Bushing	3, 4 or 5
PF-5	Wiper Bushing	1
PF-6	Wiper	1

Weights

Bore	Approximate Cylinder Weights (oz.)					
	Base			Adder per 1/8" of stroke		
	FO2	FO3	FO4	FO2	FO3	FO4
2-1/2" (50)	37.2	53.3	69.4	1.2	1.8	2.4
3" (70)	49.9	71.0	92.1	1.6	2.4	3.2
4" (125)	93.1	133.8	174.5	2.0	3.0	4.0

Dimensions (in)

Bore	A	B**			C	D	E Standard	E Coarse	E Depth	F	H
		FO2	FO3	FO4							
2-1/2" (50)	3.75	2.29	3.15	4.02	3.25	1/4	1/2-20 UNF	1/2-13 UNC	0.70	0.75	0.63
3" (70)	4.25	2.39	3.28	4.18	3.78	1/4	5/8-18 UNF	5/8-11 UNC	0.73	0.88	0.75
4" (125)	5.50	3.04	4.15	5.27	4.94	5/16	3/4-16 UNF	3/4-10 UNC	0.80	1.00	0.88

Bore	J	K	L	R	T	V	X	Z	AA	BB	CC
2-1/2" (50)	0.66	0.33	1/4 NPT	1/4-20 UNC	0.91	0.58	0.41	N/A	1.00	1.79	2.65
3" (70)	0.69	0.33	1/4 NPT	1/4-20 UNC	0.94	0.58	0.39	0.28	1.03	1.85	2.75
4" (125)	0.84	0.42	3/8 NPT	5/16-18 UNC	1.22	0.80	0.50	0.34	1.43	2.47	3.58

See page 2.34 for length adders for options.

** For Strokes .125, .188, and .250

Bore	Type	Final Overall Cylinder Length*		
		Stroke		
		.125	.188	.250
2-1/2" (50)	FO2	2.65	2.71	2.77
	FO3	3.64	3.76	3.87
	FO4	4.63	4.81	4.97
3" (70)	FO2	2.75	2.81	2.88
	FO3	3.77	3.90	4.01
	FO4	4.79	4.98	5.15
4" (125)	FO2	3.38	3.44	3.53
	FO3	4.61	4.74	4.89
	FO4	5.85	6.04	6.24

Mounting Options

Threaded Mounting Holes

(available either or both ends)
(-3R shown)

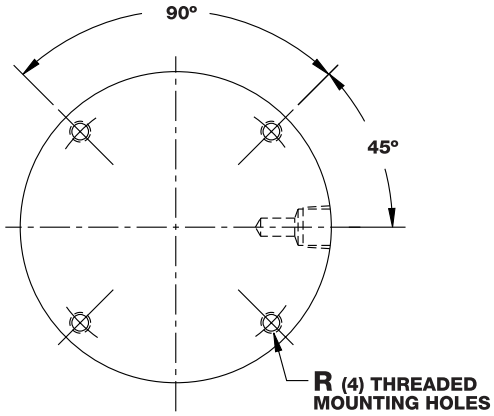

Screw Clearance Holes

(available either or both ends)
(-4R shown) Screw clearance holes standard on all center sections

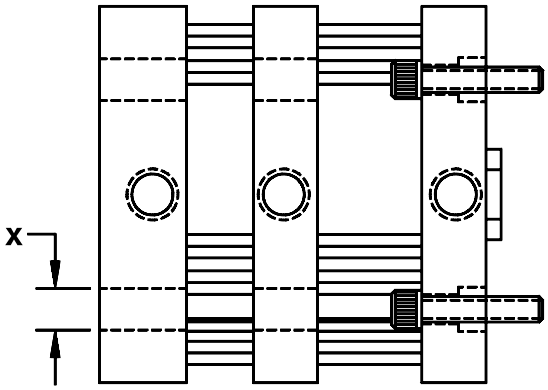

Basic Model

Standard Strokes
1/8", 1/4", 3/8", 1/2", 5/8", 3/4", 1", 1-1/4", 1-1/2", 1-3/4", 2", 2-1/2", 3", 3-1/2", 4"
Special strokes available on request

Model FO2

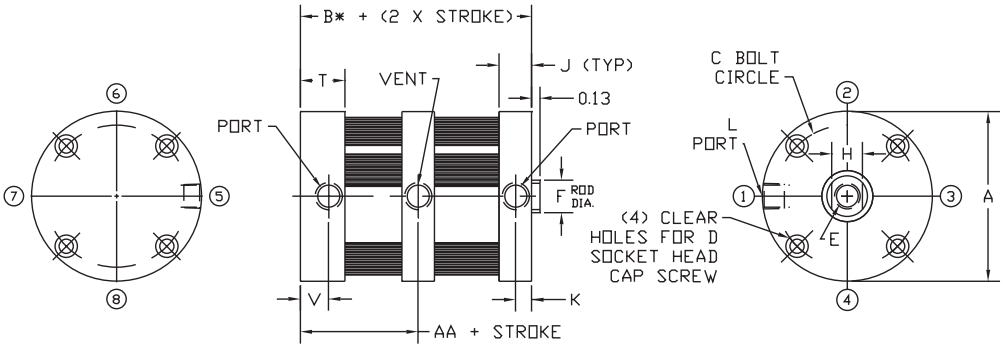

*Some options affect cylinder length, see page 2.34.

Model FO3

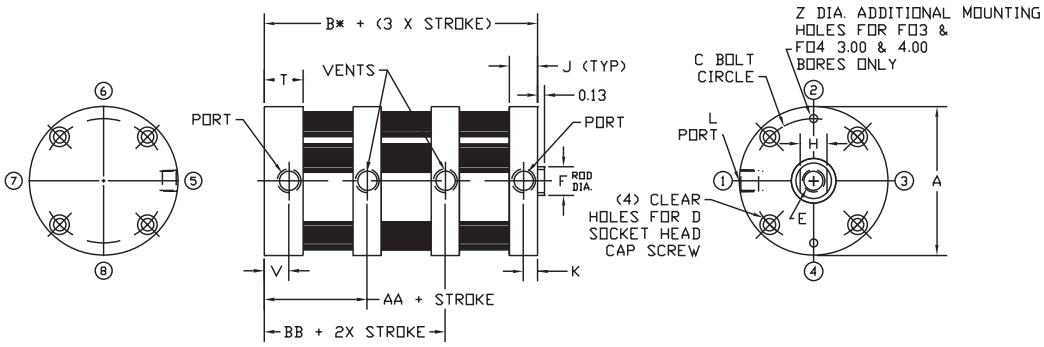

*Some options affect cylinder length, see page 2.34.

Model FO4

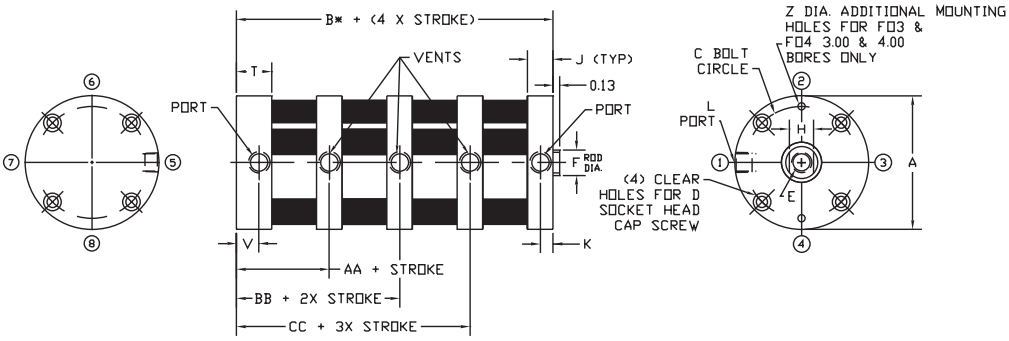

*Some options affect cylinder length, see page 2.34.

Options

Bore	Type	Length Adder		
		Low Friction Seal (L)	Magnetic Position Sensing (M)	Low Friction Seals & Magnetic Position Sensing (LM)
2-1/2" (50)	FO2	0.75	.88	1.25
	FO3	1.13		1.63
	FO4	1.50		2.00
3" (70)	FO2	1.00	.88	1.38
	FO3	1.50		1.88
	FO4	2.00		2.38
4" (125)	FO2	1.00	.88	1.38
	FO3	1.50		1.88
	FO4	2.00		2.38

Male Rod Ends (Option MT or CMT)

(Model FO2 shown)

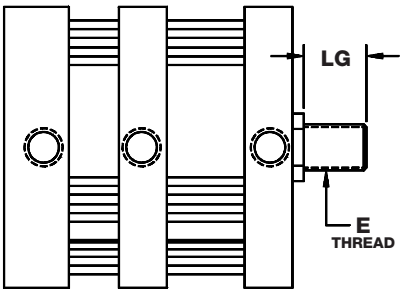

Bore	E		LG
	MT	CMT	
2-1/2" (50)	1/2-20	1/2-13	0.63
3" (70)	5/8-18	5/8-11	0.75
4" (125)	3/4-16	3/4-10	0.75

Rod Wiper (Option W)

(Buna N standard, not available in high temperature option) (Model FO2 shown).

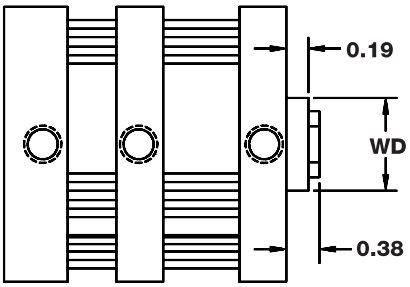

Bore	WD
2-1/2" (50)	1.13
3" (70)	1.25
4" (125)	1.38

Bimba FOP

*The Bimba Multiple Position FOP Flat-1 is a double-acting, single rod end cylinder that provides three positions with just one cylinder.**

- Body — 304 Stainless Steel
- Heads — Anodized Aluminum Alloy
- Piston Rod — Ground and Polished 303 Stainless Steel
- Seals — Buna N (High temperature seals optional)
- Rod Bushing — Oil Impregnated Bronze
- Pressure Rating — 200 PSI Maximum (Air only)
- Temperature Rating — From -20˚F to +150˚F (-25˚C to +65˚C) Buna N seals with a temperature range of -20˚F to +150˚F (-25˚C to +65˚C) are standard in all Bimba air cylinders. Fluoroelastomer seals rated for higher temperature applications are available. If cylinders are operated at temperatures below 0˚F (-18˚C) for extended time periods, special modifications may be required. Special seal materials are available upon request.

Other positions (4, 5, etc.) are available as specials. Contact your local Bimba distributor for more information.

How it Works

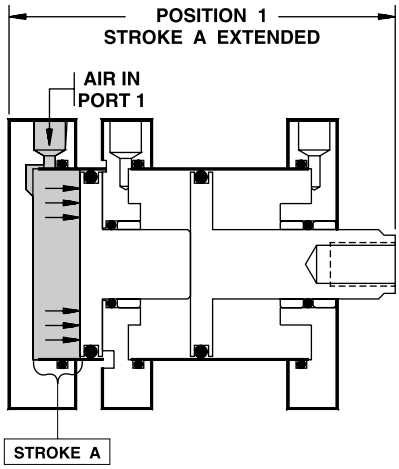

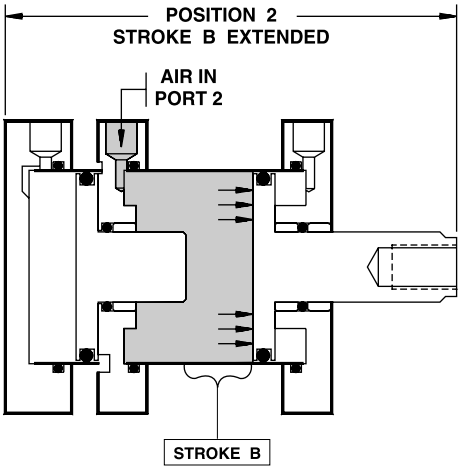

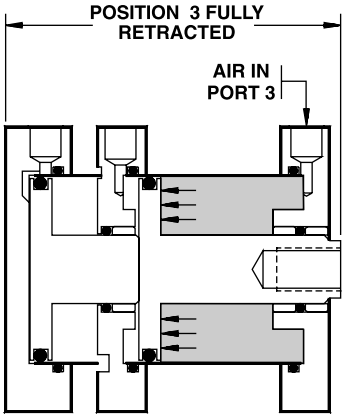

Position 1
Air is supplied to Port 1, cylinder extends stroke length A.

Position 2
Air is supplied to Port 2, cylinder extends stroke length B.

Position 3
Cylinder is fully retracted by supplying air to Port 3.

Note: For Magnetic Position Sensing option, magnet is mounted only on the piston of the Stroke B side.

How to Order

The model number for all Multiple Position FOP Flat-1 cylinders consists of three alphanumeric clusters. The first cluster designates type, the second cluster bore size and stroke lengths A and B, and the third cluster designates mounting and special options. Please refer to the charts below for an example of Model Number FOP-170.375/0.25-1V. This is a 1-1/2" bore multiple position FOP Flat-1 with a 3/8" stroke for position A, plus an **additional** stroke of 1/4" for position B, with a pivot mount on the rear head and high temperature seals.

TYPE	BORE SIZE	STROKE LENGTH A	STROKE LENGTH B
FOP - Double acting multiple position, single end rod	02 – 9/16" 04 – 3/4" 09 – 1-1/16" 17 – 1-1/2" 31 – 2" 50 – 2-1/2" 70 – 3" 125 – 4"	0.25 - 1/4" 0.375 - 3/8" 0.625 - 5/8" ETC.	0.25 - 1/4" 0.375 - 3/8" 0.625 - 5/8" ETC.

FOP-170.375/0.25-1 V

MOUNTING OPTIONS

(Enter in numeric order)

No Number - Basic model (Standard counter-bored mounting holes)
1 - Pivot mount
1N - Pivot mount 90° from standard
3 - Threaded mounting holes, both ends
3F - Threaded mounting holes, front
3R - Threaded mounting holes, rear
4 - Screw clearance holes, both ends[1]
4F - Screw clearance holes, front[1]
4R - Screw clearance holes, rear[1]

[1] "Screw clearance" to allow bolt head to pass through; no counter bores (see page 2.38).

OPTIONS

(Enter in alphabetical order, except for EE which is last)

CFT – Coarse female rod thread (fine thread standard) (see page 2.39)
CMT – Male rod thread end (coarse thread) (see page 2.40)
G – Magnalube® G
L – Low friction seals (see page 2.40)
M, M1, M3, M4 – Magnetic position sensing (see table page 2.9[1] and Switch Products Section)
MT – Male rod thread end (fine thread) (see page 2.40)
NT – Non-threaded rod
P2*, P3, P4 – Front port position #2, etc. (see page 2.38)[1]
P6*, P7, P8 – Rear port position #6, etc. (see page 2.38)[1]
Q – Low temperature option (-40°F to 200°F)
T1, T3, T4 – Additional switch mounting post located in position #1, #3 or #4
V – High temperature option (0°F to 400°F)[2]
W – Rod wiper (Buna-N only) (see page 2.40)
Y – Moly-coat (MoS_2 I. D. coating)
EE0.375 – 3/8" extra rod extension
EE1 – 1" extra rod extension, etc.

[1] Not available in 9/16" bore

[2] If magnetic position sensing is specified with option V, standard Buna-N based magnet will be provided. Magnetic position sensing is not reliable above 200°F.

List Prices

Basic Model	Base Price by Bore Size							
	9/16"	3/4"	1-1/16"	1-1/2"	2"	2-1/2"	3"	4"
Base Model	$71.70	$75.35	$91.75	$108.60	$124.55	$153.80	$209.50	$279.05
Total combined stroke adder (per 1/8")*	0.40	0.40	0.50	0.75	1.00	1.10	1.20	1.50

**Total combined stroke = (2 x Stroke A) + Stroke B.*

Mounting Options	Price Adders by Bore Size							
	9/16"	3/4"	1-1/16"	1-1/2"	2"	2-1/2"	3"	4"
Pivot Mount (Options 1, 1N)	$11.50	$12.15	$14.10	$18.95	$22.10	$28.60	$34.35	$46.90
Threaded Mounting Holes (Options 3, 3F, 3R)	3.10 per end	3.30 per end	3.40 per end	4.20 per end	4.20 per end	4.90 per end	4.90 per end	6.00 per end
Screw Clearance Holes (Options 4, 4F, 4R)	2.50 per end	2.60 per end	2.60 per end	2.60 per end	2.60 per end	2.60 per end	2.60 per end	2.60 per end

Options	Price Adders by Bore Size							
	9/16"	3/4"	1-1/16"	1-1/2"	2"	2-1/2"	3"	4"
EE (per 1/2" increments)	$0.80	$0.80	$0.90	$1.05	$1.25	$1.25	$1.40	$1.90
MT, CMT Male Rod Thread	4.20	4.40	4.85	5.30	7.30	7.30	8.65	10.20
V Option (Standard Seals)	5.05	5.40	7.95	12.55	16.60	22.50	32.85	41.10
V Option (Low Friction Seals)	14.60	15.00	23.80	29.50	46.90	59.00	69.30	83.35
W Rod Wiper	7.10	7.40	9.10	9.70	11.40	12.15	13.90	14.65
L Low Friction Seals	6.50	6.75	8.40	9.45	11.10	13.70	15.85	18.55
Magnetic Piston Sensing (Options M, M1, M3, M4)	6.90	6.90	6.90	10.10	16.70	22.90	27.45	30.50
Switch Mounting Post (Options T1, T3, T4)	3.60	3.60	4.85	4.85	4.85	5.90	5.90	5.90
Y (Adder per 1/8" of total combined stroke)	0.50	0.50	0.50	0.50	0.50	0.50	0.50	0.50
Q Option (Standard Seals)	4.95	6.15	7.80	9.75	12.10	15.20	18.95	23.70
Q Option (Low Friction Seals)	10.55	13.25	16.50	20.80	26.00	32.65	40.60	50.85

No charge options – CFT, G, NT, P2, P3, P4, P6, P7, P8.

Basic Model

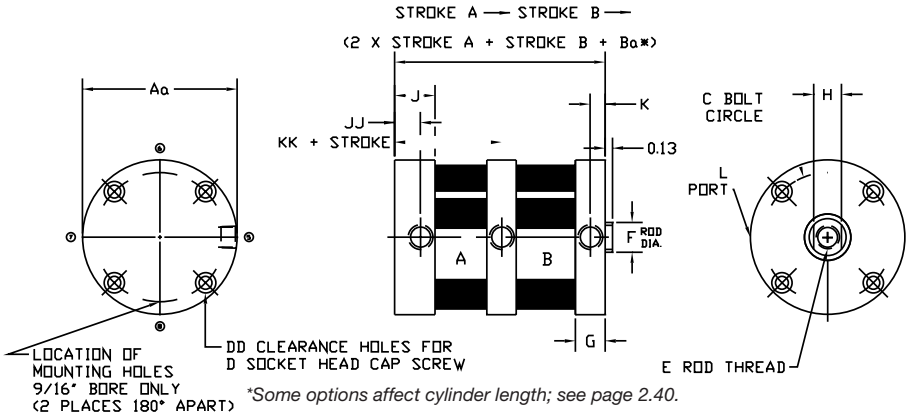

Some options affect cylinder length; see page 2.40.

Mounting Options

Pivot Mount

(-1 shown) Complete with bronze pivot bushing.
(Not available as an accessory)

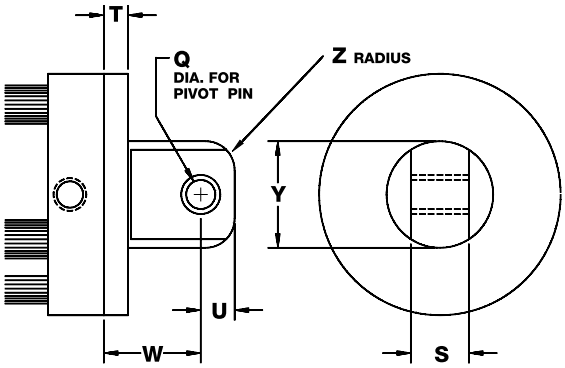

Screw Clearance Holes

(available either or both ends)
(-4R shown) Screw clearance holes standard on all center sections

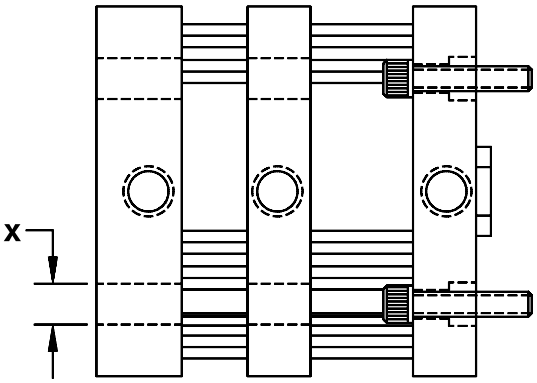

Threaded Mounting Holes

(available either or both ends)
(3, -3F or -3R shown)

9/16" Bore

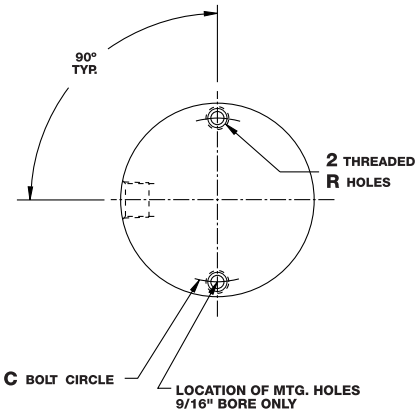

3/4" Bore and larger

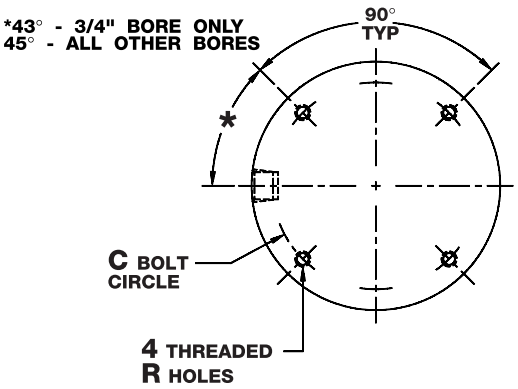

Dimensions (in)

Bore	Aa	Ba*	C	DD	D	E Standard	E Coarse	E Depth	F
9/16" (02)	1.13	1.14	0.88	2	#4	#8-32 UNC	N/A	0.46	0.25
3/4" (04)	1.50	1.14	1.22	4	#6	#10-32 UNF	#10-24 UNC	0.46	0.31
1-1/16" (09)	2.00	1.67	1.69	4	#6	5/16-24 UNF	5/16-18 UNC	0.70	0.50
1-1/2" (17)	2.63	1.70	2.19	4	#10	3/8-24 UNF	3/8-16 UNC	0.70	0.63
2" (31)	3.13	1.80	2.69	4	#10	1/2-20 UNF	1/2-13 UNC	0.70	0.75
2-1/2" (50)	3.75	2.25	3.25	4	1/4	1/2-20 UNF	1/2-13 UNC	0.70	0.75
3" (70)	4.25	2.34	3.78	4	1/4	5/8-18 UNF	5/8-11 UNC	0.73	0.88
4" (125)	5.50	3.00	4.94	4	5/16	3/4-16 UNF	3/4-10 UNC	0.80	1.00

Bore	G	H	J	JJ	K	KK	L
9/16" (02)	0.34	0.22	0.47	0.27	0.14	0.49	#10-32
3/4" (04)	0.34	0.25	0.47	0.27	0.14	0.49	#10-32
1-1/16" (09)	0.50	0.44	0.69	0.44	0.25	0.73	1/8 NPT
1-1/2" (17)	0.50	0.50	0.69	0.44	0.25	0.74	1/8 NPT
2" (31)	0.53	0.63	0.72	0.44	0.25	0.78	1/8 NPT
2-1/2" (50)	0.66	0.63	0.91	0.58	0.33	0.93	1/4 NPT
3" (70)	0.69	0.75	0.94	0.58	0.33	0.95	1/4 NPT
4" (125)	0.84	0.88	1.22	0.80	0.42	1.36	3/8 NPT

Bore	R	LG	WD	Q	S	T	U	W	X	Y	Z
9/16" (02)	#4-40 UNC	0.38	0.56	0.19	0.38	0.19	0.25	0.75	0.20	0.63	0.19
3/4" (04)	#6-32 UNC	0.38	0.69	0.19	0.38	0.19	0.25	0.75	0.23	0.75	0.19
1-1/16" (09)	#6-32 UNC	0.50	0.88	0.19	0.38	0.25	0.25	0.81	0.25	0.75	0.19
1-1/2" (17)	#10-24 UNC	0.50	1.00	0.38	0.75	0.25	0.44	1.19	0.34	1.38	0.38
2" (31)	#10-24-UNC	0.63	1.12	0.38	0.75	0.31	0.44	1.25	0.34	1.38	0.38
2-1/2" (50)	1/4-20 UNC	0.63	1.12	0.38	0.75	0.38	0.44	1.31	0.41	1.38	0.38
3" (70)	1/4-20 UNC	0.75	1.25	0.63	1.00	0.38	0.56	1.69	0.41	1.88	0.38
4" (125)	5/16-18 UNC	0.75	1.38	0.63	1.00	0.44	0.56	1.75	0.50	1.88	0.38

See page 2.40 for length adders for options.

Length Adder Dimensions for Options

(Dimensional variations from standard as shown.)

Bore	Length Adder		
	Low Friction Seals (L)	Magnetic Position Sensing* (M)	Low Friction Seals and Magnetic Position Sensing
9/16" (02), 3/4" (04)	0.50	0.88	1.12
1-1/16" (09), 1-1/2" (17), 2" (31), 2-1/2" (50)	0.75	0.88	1.25
3" (70), 4" (125)	1.00	0.88	1.38

**A minimum total stroke of 0.38" is required to sense extending end-of-stroke position.*

Minimum Stroke

Model \ Bore	9/16" (02)	3/4" (04)	1-1/16" (09)	1-1/2" (17)	2" (31)	2-1/2" (50)	3" (70)	4" (125)
Base Model Stroke A	0.19	0.19	0.25	0.25	0.25	0.38	0.38	0.34

No minimum for stroke B.
No minimum for stroke A or B with low friction seal option.

Rod Wiper (Option W)

(Buna N standard, not available in high temperature option)

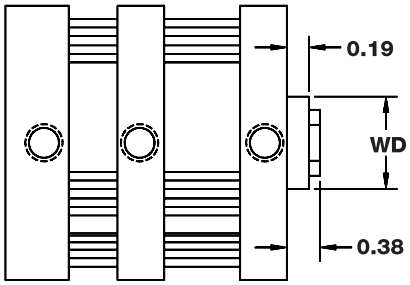

Bore	WD
9/16" (02)	0.56
3/4" (04)	0.69
1-1/16" (09)	0.88
1-1/2" (17)	1.00
2" (31), 2-1/2" (50)	1.13
3" (70)	1.25
4" (125)	1.38

Male Rod Ends (Option MT or CMT)

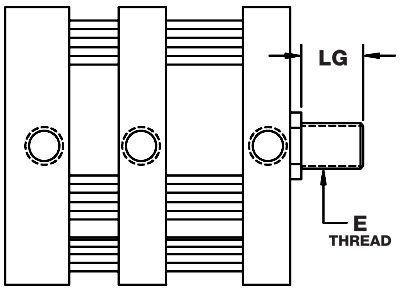

Bore	E		LG
	MT	CMT	
9/16" (02)	#8-32	N/A	0.38
3/4" (04)	#10-32	#10-24	0.38
1-1/16" (09)	5/16-24	5/16-18	0.50
1-1/2" (17)	3/8-24	3/8-16	0.50
2" (31), 2-1/2" (50)	1/2-20	1/2-13	0.63
3" (70)	5/8-18	5/8-11	0.75
4" (125)	3/4-16	3/4-10	0.75

Repair Kits

Basic Repair Kit (K-B-FOP)*		
Part No.	Description	Quantity
PF-1	Rod Seal	2
PF-2	Piston Seal	2
PF-3	Tube Seal	3
PF-4	Bushing	3

**Must specify bore size when ordered. Contact your local Bimba distributor for pricing on kits and other repair parts.*

Wiper Option Repair Kit (K-B-FOP-W)*		
Part No.	Description	Quantity
PF-1	Rod Seal	2
PF-2	Piston Seal	2
PF-3	Tube Seal	3
PF-4	Bushing	2
PF-5	Wiper Bushing	1
PF-6	Wiper	1

Weights

Bore	Approximate Cylinder Weights (oz.)	
	Base	Adder per 1/8" of stroke
9/16" (02)	3.3	0.16
3/4" (04)	4.5	0.2
1-1/16" (09)	9.9	0.6
1-1/2" (17)	18.7	0.8
2" (31)	24.5	1
2-1/2" (50)	41.3	1.2
3" (70)	52.9	1.6
4" (125)	102.7	2

Selection Guide

(All Models)

Accessory	Flat-1	Square Flat-1	Square Flat-II	Flat-II	FO2	FOP
Clevis Bracket	X	X	X	X	N/A	X
Trunnion Bracket	X	N/A	N/A	X	N/A	N/A
Rod Pivot	X	X	N/A	N/A	X	X
Pivot Attachment	N/A	X	X	N/A	N/A	N/A

Clevis Bracket

Anodized aluminum alloy, complete with stainless steel pin

Model	Bore	LD	MT	Q	S	SH	SD	TH	TL
BC-1	9/16" (02), 3/4" (04), 1-1/16" (09)	0.56	0.75	0.19	0.39	#6	1.00	0.16	0.78
BC-2	1-1/2" (17), 2" (31), 2-1/2" (50)	0.94	1.38	0.38	0.75	#10	1.75	0.22	1.34
BC-3	3" (70), 4" (125)	1.25	2.00	0.63	1.00	0.25	2.50	0.25	1.81

Bracket intended to mount with either rod pivot or pivot mount, not directly to the cylinder rear head.

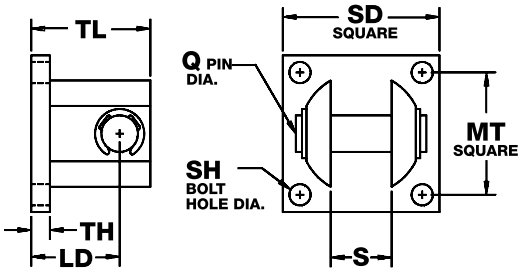

Trunnion Bracket (pair)

Anodized aluminum alloy, complete with bronze pivot bushings

Model	Bore	BA	BT	HT	LT	M	N	NA	NB
BT-1	3/4" (04)	0.56	#10	0.63	1.12	0.31	0.13	0.30	0.22
BT-2	1-1/16" (09), 1-1/2" (17), 2" (31)	0.81	0.25	0.88	1.50	0.50	0.25	0.38	0.31
BT-3	2-1/2" (50), 3" (70)	0.94	0.31	1.00	1.63	0.63	0.31	0.45	0.38
BT-4	4" (125)	1.06	0.38	1.25	1.88	0.75	0.38	0.55	0.44

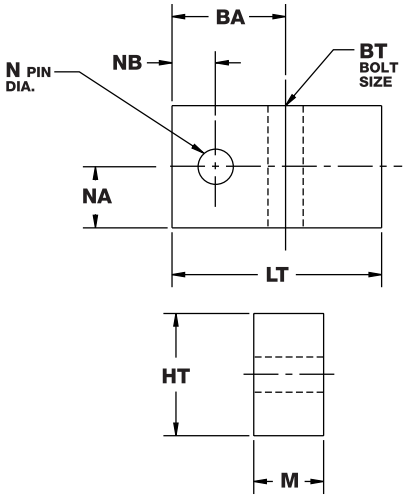

Rod Pivot

Zinc plated, high strength, heat treated alloy steel, complete with a bronze pivot bushing and nut

Model	Bore	E	LN	MS	NT	Q	S
RP-1/2	9/16" (02)	#8-32 UNC	0.38	0.47	0.25	0.19	0.38
RP-1	3/4" (04)	#10-32 UNF	0.38	0.47	0.25	0.19	0.38
RP-2	1-1/16" (09)	5/16-24 UNF	0.63	0.47	0.25	0.19	0.38
RP-3	1-1/2" (17)	3/8-24 UNF	0.63	0.72	0.44	0.38	0.75
RP-4	2" (31), 2-1/2" (50)	1/2-20 UNF	0.75	0.72	0.44	0.38	0.75
RP-5	3" (70)	5/8-18 UNF	0.88	1.00	0.63	0.63	1.00
RP-6	4" (125)	3/4-16 UNF	0.88	1.00	0.63	0.63	1.00

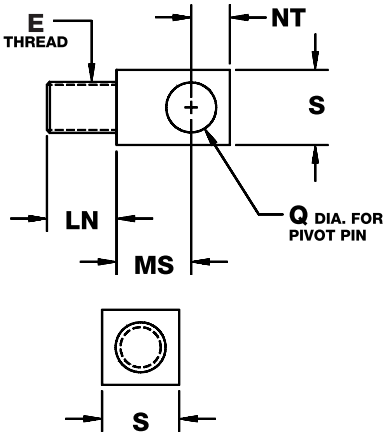

Pivot Attachment

Anodized aluminum alloy. Complete with two mounting screws. Not necessary if ordered as part of complete Square Flat-1 cylinder (1 or 1N option).

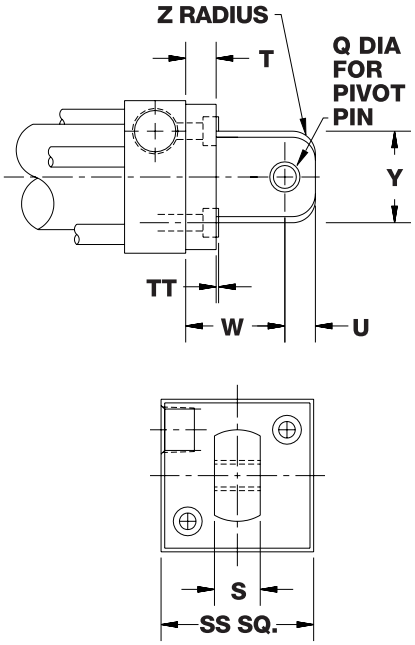

Model	Bore	Q	S	SS	T	TT	U	W	Y	Z
PM-1	3/4" (04)	0.19	0.38	1.13	0.19	0.020	0.25	0.75	0.75	–
PM-2	1-1/16" (09)	0.19	0.38	1.25	0.25	0.020	0.25	0.81	0.75	–
PM-3	1-1/2" (17)	0.38	0.75	1.75	0.25	0.025	0.44	1.19	1.38	–
PM-4	2" (31)	0.38	0.75	2.25	0.31	0.080	0.44	1.38	1.38	–
PM-5	2-1/2" (50)	0.38	0.75	3.00	0.38	0.05	0.44	1.31	1.38	0.38
PM-6	3" (70)	0.63	1.00	3.50	0.38	0.05	0.56	1.69	1.88	0.38
PM-7	4" (125)	0.63	1.00	4.50	0.44	0.12	0.56	1.75	1.88	0.38

Price List

Description	Model	List Price
Rod Pivot	RP-1/2	$12.10
	RP-1	12.95
	RP-2	12.95
	RP-3	13.55
	RP-4	13.55
	RP-5	15.90
	RP-6	16.50
Trunnion Bracket	BT-1	12.55
	BT-2	13.70
	BT-3	16.05
	BT-4	17.80
Clevis Bracket	BC-1	18.35
	BC-2	26.10
	BC-3	35.75
Pivot Attachment	PM-1	16.35
	PM-2	18.05
	PM-3	23.40
	PM-4	27.75
	PM-5	40.00
	PM-6	59.10
	PM-7	73.75
Wrench Kit (Fits wrench flats on all piston rods)	FWK	18.70

Bimba EF Cylinders

The Bimba EF Series is a compact, aluminum-extruded body air cylinder designed for international machine requirements.

The body is anodized in a special PTFE-impregnation process that provides superior wear characteristics. With its streamlined look, low cost and low-profile switch, it is an excellent choice for space-saving machine design.

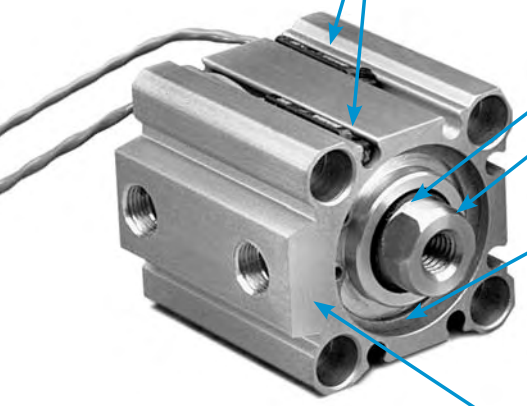

EF Cylinder

- Low Profile Switch
- Nitrile Piston Seal
- High Strength Aluminum Alloy Piston
- Nitrile Rod Seal and Wiper
- 4301 (303) Stainless Steel Rod
- Nitrile Rod Guide Seal
- Zinc Plated Carbon Steel Retaining Ring
- Bronze Bushing (12-20mm); Self-lubricating Nylon (25-100mm)
- Bronze Rod Guide (12-20mm); Anodized Aluminum (25-100mm)
- PTFE-Impregnated, Hard Anodized Aluminum Body

EFT Cylinder

- Anodized Aluminum Tooling Plate with High Strength Stainless Steel Fasteners

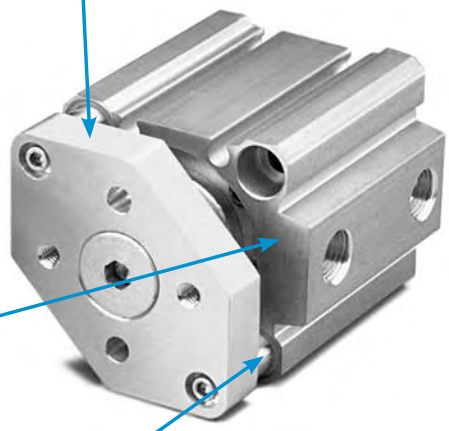

- Hard Chrome Plated Steel Guide Shafts; Composite Shaft Bearings

Features and Advantages

- PTFE-impregnated, hard anodized aluminum body provides superior wear resistance. Expected service life is 2500 kilometers.
- Very compact; dimensionally-interchangeable with similar compact extruded aluminum body cylinders.
- Very low profile, compact switch slides into groove within cylinder geometry.
- EF1 cylinders are available in four models: double acting, single or double rod end; and single acting, spring return or extend, and EF2 cylinders are available in double acting, non-rotating.
- NEW!! EFDT cylinders are now available as a double acting, double ended, non-rotating rod cylinder to provide an additional operation feature from the cylinder rear.
- Both models are available in ten bore sizes from 12mm to 100mm.
- Wide variety of standard stroke lengths in 5mm increments; additional stroke lengths available.
- Standard cylinder is completely metric in design; with Option -E, threaded mounting options, rod threads and ports are in U.S. customary units (inch).
- Mounting options include threaded bottom mounting and threaded front/rear mounting option.
- Options include bumpers, ports and threaded mounting option and rod threads in U.S. customary units, magnetic position sensing, and high temperature seals.
- NEW!! X option for EFT and EFDT cylinders only. This option increases stability by at least two times and up to 23 times depending on bore size. In addition, the X option more than doubles the maximum cylinder side load and moment!

How to Order

The Model Number for all EF1 cylinders consists of three alphanumeric clusters. These designate type, bore size and stroke length, and options. Please refer to the charts below for an example of Model Number EF-2510-3MMTV. This is a 25mm bore, double acting, single end rod cylinder, with metric threads and ports, 10mm of stroke, threaded front/rear mounting holes, magnetic position sensing, male rod end and high temperature option.

TYPE

EF – Double Acting, Single End Rod
EFD – Double Acting, Double End Rod
EFS – Single Acting, Spring Retract
EFR – Single Acting, Spring Extend

BORE SIZE mm (inch)*

12mm – (1/2")	40mm – (1-1/2")
16mm – (5/8")	50mm – (2")
20mm – (3/4")	63mm – (2-1/2")
25mm – (1")	80mm – (3-1/4")
32mm – (1-1/4")	100mm – (4")

STROKE LENGTH**

See table - page 2.46

EF-2510-3MMTV

MOUNTING OPTIONS

(Enter in numeric order)

No Number - Basic model
1 - Threaded bottom mounting option
3 - Threaded front/rear mounting option
6 - Rear Clevis
6N - Rear Clevis 90°

OPTIONS

(Enter in alphabetical order, except for EE which is last)

B – Bumpers (see page 2.56)[1]
C – Stainless steel retaining ring
E – U.S. customary units (inch)[2]
F – Full-flow port orifice[5]
M – Magnetic position sensing (see table page 2.56)[3]
MT – Male rod end (fine thread) (see page 2.55)[4]
NT – Non-threaded rod
V – High temperature option -10°C to 110°C (15°F to 225°F)
EE – Extra rod extension in 1mm increments

[1]***Bumpers reduce stroke length by 3mm. When bumper is specified with option V, standard bumper material is supplied. Operating temperature remains -10° to 70°C (15° to 160°F).***

[2]***When option E is specified, user interface threads are designated U.S. customary (inch). This includes ports, rod threads and threaded mounting options (as applicable).***

[3]***When magnetic position sensing is specified with option V, operating temperature remains -10° to 70°C (15° to 160°F). This combination is recommended when fluoroelastomer is specified for compatibility.***

[4]***MT option must be specified to use rod pivot.***

[5]***Automatically includes bumpers, so stroke is reduced by 3mm.***

Please note that throughout all catalog charts, metric measurements are shown first and U.S. customary units (inches) are in parentheses.

**NOTE: Numbers in parentheses are the equivalent bore size in inches and listed FOR REFERENCE ONLY. DO NOT use for model designation.*

***When stroke length exceeds 30mm, a threaded mounting option should be considered. Mounting bolts that span the entire cylinder length may not be readily available.*

Bimba EFI Cylinders

Bimba is a JIT manufacturer and we are able to provide EF model cylinders in **ANY 1mm of stroke length increment for all option styles within our standard three-day lead time*. Longer stroke lengths are also available upon request at standard lead times. Please consult Technical Assistance at 800-44-BIMBA for help.

The table below represents our standard stroke lengths. **Blue** stroke lengths are EF cylinders with -E and -3EM options in stock available for Same Day Shipping.

Stroke Length Availability

Nominal Bore Diameter	Double Acting		Single Acting	
	EF Single Rod End (mm)	EFD Double Rod End (mm)	EFS Single Acting Spring Retract (mm)	EFR* Reverse Acting Spring Extend (mm)
12mm (1/2")	**5**, 10, **15**, 20, **25**, 30	5, 10, 15, 20, 25, 30	5, 10	5, 10
16mm (5/8")	5, **10**, 15, 20, 25, 30	5, 10, 15, 20, 25, 30	5, 10	5, 10
20mm (3/4")	5, **10**, 15, 20, **25**, 30, 35, **40**, 45, **50**	5, 10, 15, 20, 25, 30, 35, 40, 45, 50	5, 10	5, 10
25mm (1")	5, **10**, 15, 20, **25**, 30, 35, **40**, 45, **50**	5, 10, 15, 20, 25, 30, 35, 40, 45, 50	5, 10	5, 10
32mm (1-1/4")	5, 10, **15**, 20, **25**, 30, 35, **40**, 45, **50**, 75, 100	5, 10, 15, 20, 25, 30, 35, 40, 45, 50, 75, 100	5, 10	5, 10
40mm (1-1/2")	5, 10, **15**, 20, **25**, 30, 35, **40**, 45, **50**, **75**, 100	5, 10, 15, 20, 25, 30, 35, 40, 45, 50, 75, 100	5, 10, 15, 20	5, 10
50mm (2")	10, **15**, 20, **25**, 30, 35, **40**, 45, **50**, **75**, **100**	10, 15, 20, 25, 30, 35, 40, 45, 50, 75, 100	10, 15, 20	10, 20
63mm (2-1/2")	10, 15, 20, 25, 30, 35, 40, 45, 50, 75, 100	10, 15, 20, 25, 30, 35, 40, 45, 50, 75, 100	10, 15, 20, 25	20, 25
80mm (3-1/4")	**10**, 15, 20, **25**, 30, 35, **40**, 45, **50**, 75, 100	10, 15, 20, 25, 30, 35, 40, 45, 50, 75, 100	10, 15, 20, 25	20, 25
100mm (4")	10, 15, 20, 25, 30, 35, 40, 45, 50, 75, 100	10, 15, 20, 25, 30, 35, 40, 45, 50, 75, 100	N/A	N/A

**EFR style is only available as a standard with the strokes listed in the table above. Any other stroke length must be ordered as a special.*

List Prices

Model Type	Bore Size									
	12mm	16mm	20mm	25mm	32mm	40mm	50mm	63mm	80mm	100mm
EF	$ 25.70	$ 28.25	$ 34.55	$ 39.90	$ 48.55	$ 57.75	$ 69.10	$ 81.90	$103.65	$156.00
Add per 5mm	1.30	1.30	1.30	1.40	1.40	1.40	1.75	1.95	2.30	2.70
EFS	24.60	27.70	31.05	38.40	41.40	50.05	60.45	76.05	96.30	N/A
EFR	27.60	30.15	35.30	40.75	49.30	58.50	71.35	83.60	105.85	N/A
Add per 5mm	1.40	1.40	1.55	1.65	1.75	1.85	2.60	2.85	3.35	N/A
EFD	35.30	38.95	47.55	54.70	66.75	79.25	95.20	112.80	142.65	214.85
Add per 5mm	2.20	2.20	2.20	2.30	2.30	2.40	3.00	3.35	3.75	4.65
Mounting Options										
1 (threaded bottom)	$ 4.20	$ 4.45	$ 5.75	$ 6.00	$ 6.75	$ 6.90	$ 7.55	$ 7.85	$ 8.35	$ 8.80
3 (thread front/rear)	6.45	6.70	8.85	9.15	10.30	10.45	11.45	12.15	12.80	13.30
6, 6N (rear clevis)	12.30	12.90	13.85	16.00	17.50	19.65	22.65	29.25	35.80	47.60
Options										
B	$ 3.70	$ 6.55	$ 6.55	$ 6.55	$ 7.75	$ 7.75	$ 8.80	$ 10.60	$ 16.10	$ 18.50
C (EF, EFS, EFR)	3.05	3.25	4.40	4.90	5.95	8.90	15.15	18.15	89.50	145.35
C (EFD)	6.00	6.25	8.60	9.75	11.75	17.65	30.30	36.15	178.80	290.50
F (includes B)	10.10	13.00	13.00	14.60	15.90	15.90	18.50	20.45	26.10	29.20
MT (per end)	1.70	1.70	1.70	2.60	2.60	2.95	3.45	3.95	7.85	11.75
M	5.55	6.80	8.90	8.90	11.00	11.00	12.90	15.65	20.10	23.40
V (EF)	12.25	13.40	13.85	16.70	18.65	26.60	29.20	38.00	46.50	58.65
V (EFS)	10.30	10.65	11.00	11.40	12.05	16.55	18.25	22.90	31.75	N/A
V (EFR)	12.25	13.40	13.85	16.70	18.65	26.60	29.20	38.00	46.50	N/A
V (EFD)	14.25	16.30	16.60	22.15	25.40	36.65	40.40	52.85	61.10	68.90
EE (per 1mm/end)	0.40	0.40	0.40	0.45	0.45	0.45	0.50	0.50	0.55	0.55

No charge options: E (U.S. customary units), NT

Invalid option combination: NT/MT

EFD models not available with option NT

All product is sold F.O.B. shipping point. Prices are subject to change without notice.

Engineering Specifications

Operating Medium:	Air
Maximum Operating Pressure:	10 bar (140 psi)
Ambient and Fluid Temperature:	-10° to 70°C (15° to 160°F)
Lubrication:	PTFE impregnated grease
Standard Rod End:	Female
Stroke Tolerance:	12-50mm bore: ± .6mm (.025 inch) 63-100mm bore: ± .8mm (.030 inch)
Cylinder Mounting (Standard):	Through hole with counterbores both ends
Cylinder Mounting (Optional):	Front and Rear threaded Side mount threaded Rear Clevis
Expected Service Life:	2500 kilometers (1500 miles)*

*For filtered, lubricated air, no-load conditions; if unlubricated, life is approximately 1/3.

Maximum Side Loads kg-Force (lb)

Bore		Stroke Length											
		5mm		10mm		15mm		20mm		25mm		30mm	
12mm	(1/2")	0.27	(0.60)	0.22	(0.49)	0.19	(0.41)	0.16	(0.35)	0.14	(0.31)	0.12	(0.27)
16mm	(5/8")	0.33	(0.73)	0.27	(0.59)	0.23	(0.50)	0.20	(0.43)	0.17	(0.38)	0.15	(0.34)
20mm	(3/4")	0.34	(0.74)	0.27	(0.60)	0.23	(0.51)	0.20	(0.44)	0.18	(0.39)	0.16	(0.35)
25mm	(1")	0.54	(1.18)	0.45	(0.99)	0.38	(0.85)	0.34	(0.74)	0.30	(0.66)	0.27	(0.59)
32mm	(1-1/4")	1.28	(2.81)	1.08	(2.38)	0.94	(2.07)	0.83	(1.83)	0.74	(1.64)	0.67	(1.48)
40mm	(1-1/2")	2.27	(4.99)	1.97	(4.34)	1.75	(3.84)	1.57	(3.44)	1.42	(3.12)	1.30	(2.85)
50mm	(2")	N/A		2.40	(5.29)	2.13	(4.69)	1.92	(4.22)	1.74	(3.83)	1.60	(3.51)
63mm	(2-1/2")	N/A		3.18	(6.99)	2.85	(6.27)	2.58	(5.69)	2.36	(5.20)	2.18	(4.80)
80mm	(3-1/4")	N/A		5.94	(13.06)	5.41	(11.91)	4.97	(10.94)	4.60	(10.12)	4.28	(9.41)
100mm	(4")	N/A		9.14	(20.10)	8.45	(18.58)	7.85	(17.28)	7.34	(16.14)	6.88	(15.15)

Bore		Stroke Length											
		35mm		40mm		45mm		50mm		75mm		100mm	
12mm	(1/2")	0.11	(0.25)	0.10	(0.23)	N/A		N/A		N/A		N/A	
16mm	(5/8")	0.14	(0.30)	0.13	(0.28)	N/A		N/A		N/A		N/A	
20mm	(3/4")	0.14	(0.32)	0.13	(0.29)	0.12	(0.27)	0.11	(0.25)	N/A		N/A	
25mm	(1")	0.24	(0.54)	0.22	(0.49)	0.21	(0.46)	0.19	(0.42)	N/A		N/A	
32mm	(1-1/4")	0.61	(1.35)	0.57	(1.25)	0.52	(1.15)	0.49	(1.07)	0.36	(0.80)	0.29	(0.64)
40mm	(1-1/2")	1.19	(2.63)	1.11	(2.44)	1.03	(2.27)	0.97	(2.12)	0.73	(1.61)	0.59	(1.30)
50mm	(2")	1.47	(3.24)	1.37	(3.01)	1.27	(2.80)	1.19	(2.63)	0.91	(2.00)	0.73	(1.61)
63mm	(2-1/2")	2.02	(4.45)	1.88	(4.15)	1.76	(3.88)	1.66	(3.65)	1.28	(2.81)	1.04	(2.29)
80mm	(3-1/4")	4.00	(8.79)	3.75	(8.25)	3.53	(7.78)	3.34	(7.35)	2.62	(5.77)	2.16	(4.75)
100mm	(4")	6.48	(14.27)	6.13	(13.48)	5.81	(12.78)	5.52	(12.15)	4.43	(9.74)	3.69	(8.13)

Theoretical Cylinder Forces

FORCE = Power Factor x Input Pressure

Bore	Direction	Power Factor* (When input pressure in bar)	Power Factor** (When input pressure in psi)
12mm (1/2")	Extend	1.1	(0.2)
	Retract	0.8	(0.1)
16mm (5/8")	Extend	2.0	(0.3)
	Retract	1.5	(0.2)
20mm (3/4")	Extend	3.1	(0.5)
	Retract	2.4	(0.4)
25mm (1")	Extend	4.9	(0.8)
	Retract	3.8	(0.6)
32mm (1-1/4")	Extend	8.0	(1.2)
	Retract	6.0	(0.9)
40mm (1-1/2")	Extend	12.6	(1.9)
	Retract	10.6	(1.6)
50mm (2")	Extend	19.6	(3.0)
	Retract	16.5	(2.6)
63mm (2-1/2")	Extend	31.2	(4.8)
	Retract	28.0	(4.3)
80mm (3-1/4")	Extend	50.3	(7.8)
	Retract	45.4	(7.0)
100mm (4")	Extend	78.5	(12.2)
	Retract	71.5	(11.1)

**Power Factor x bar = kg.*
***Power Factor x psi = Pounds*

Enclosed Spring Forces

Action	Bore		Compressed Spring Force N	(lb)	Spring Rate N/mm	(lb/in)
Spring Acting Spring Return	12mm	(1/2")	12.8	(2.9)	0.8	(4.8)
	16mm	(5/8")	16.0	(3.6)	1.0	(5.7)
	20mm	(3/4")	18.1	(4.1)	1.2	(6.9)
	25mm	(1")	21.4	(4.8)	1.1	(6.4)
	32mm	(1-1/4")	22.2	(5.0)	0.8	(4.3)
	40mm	(1-1/2")	33.1	(7.4)	0.9	(5.1)
	50mm	(2")	53.8	(12.1)	1.2	(6.7)
	63mm	(2-1/2")	89.0	(20.0)	2.1	(11.8)
	80mm	(3-1/4")	106.8	(24.0)	2.3	(13.2)
	100mm	(4")	N/A	(N/A)	N/A	(N/A)
Reverse Acting Spring Extend	12mm; 5mm stroke		10.9	(2.5)	1.6	(9.1)
	12mm; 10mm stroke		11.0	(2.5)	0.8	(4.6)
	16mm; 5mm stroke		20.7	(4.7)	3.4	(19.5)
	16mm; 10mm stroke		20.9	(4.7)	1.8	(10.3)
	20mm		27.3	(6.1)	2.3	(12.9)
	25mm		29.1	(6.5)	2.0	(11.2)
	32mm		26.6	(6.0)	0.9	(5.1)
	40mm		30.1	(6.8)	1.2	(7.1)
	50mm		81.9	(18.4)	2.9	(16.7)
	63mm; 20mm stroke		95.3	(21.4)	3.0	(16.7)
	63mm; 25mm stroke		95.3	(21.4)	2.4	(13.3)
	80mm; 20mm stroke		110.8	(24.9)	3.2	(17.8)
	80mm; 25mm stroke		110.9	(24.9)	2.5	(14.2)
	100mm		N/A	(N/A)	N/A	(N/A)

Body Styles

12mm Bore

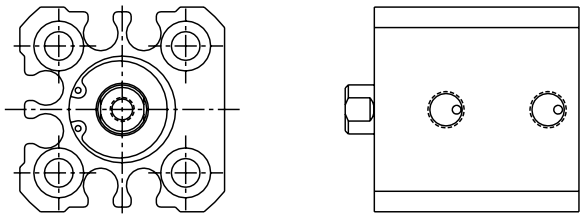

16mm to 32mm Bore

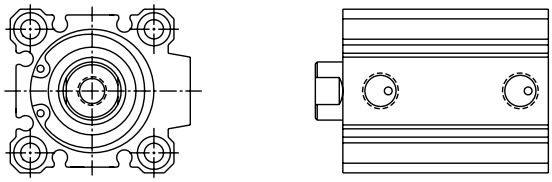

4mm to 100mm Bore

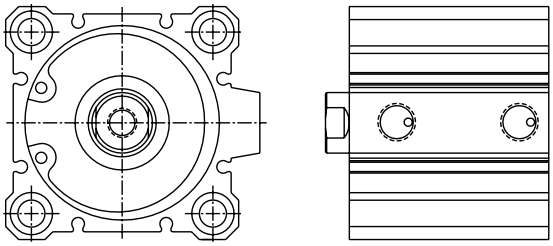

Components

Part List

Part #	Description	Material
1	Rod	4301 (303) Stainless Steel
2	Rod Seal/Wiper	Nitrile (Standard) or Fluoroelastomer (High Temperature Option)
3	Retaining Ring	Zinc Plated Carbon Steel or Stainless Steel (optional)
4	Rod Guide	12-20mm: Bronze / 25-100mm: Anodized Aluminum
5	Bushing	12-20mm: Bronze / 25-100mm: Self Lubricating Nylon
6	Piston Seal	Nitrile (Standard) or Fluoroelastomer (High Temperature Option)
7	Cylinder Body	Polytetrafluoroethylene (PTFE) Impregnated Hard Anodized Aluminum
8	Rod Guide Seal	Nitrile (Standard) or Fluoroelastomer (High Temperature Option)
9	Piston	High Strength Aluminum Alloy
10	Spring	Corrosion Protected Music Wire

Single Acting/Spring Retract

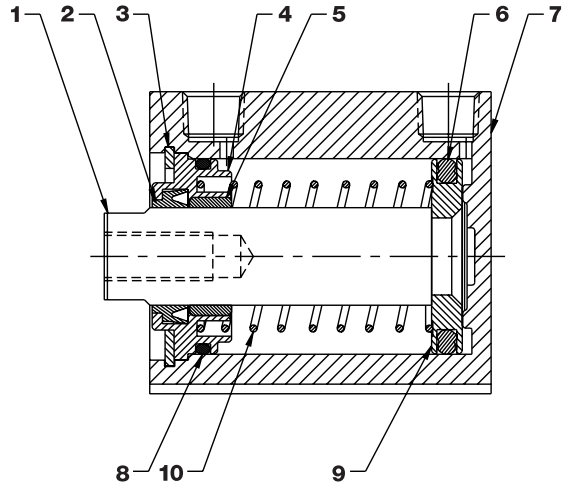

Single Acting/Spring Extend

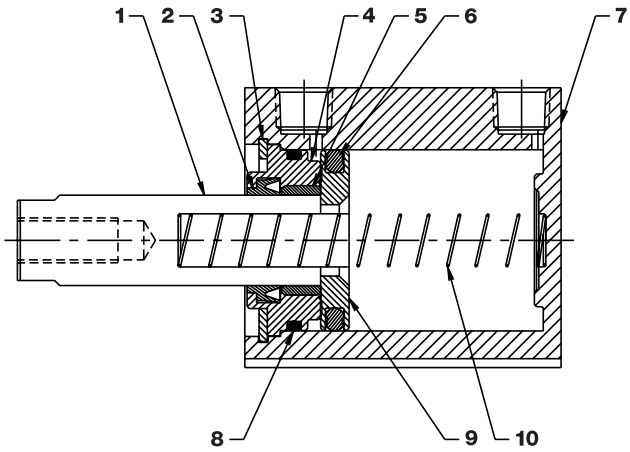

Double Acting/Single Rod

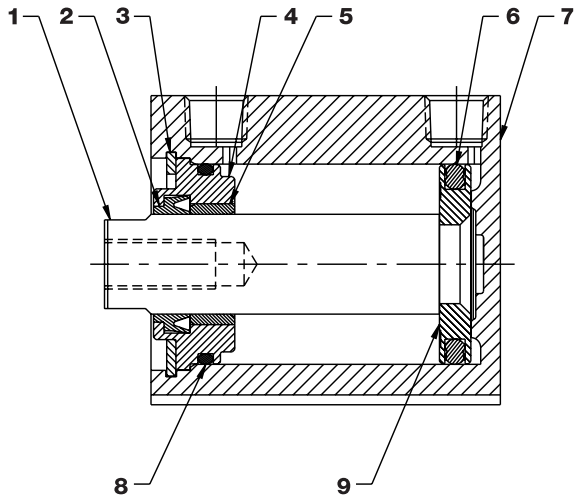

Double Acting/Double Rod

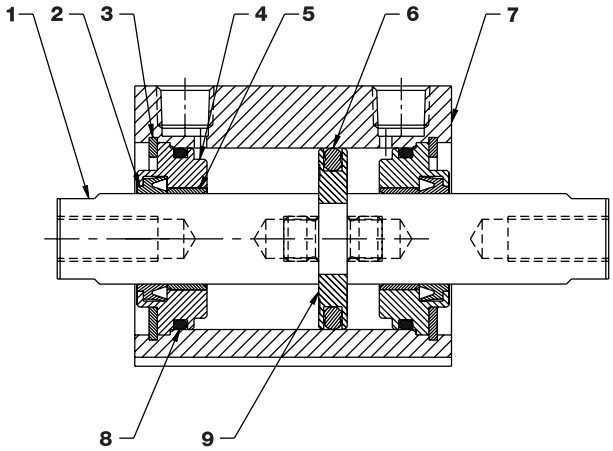

Dimensions

Shown in millimeters (inches)

Double Acting/Single Rod

Bore	A	B	C	D	E	F	H
12mm (1/2")	3.8 (0.15)	17.0 (0.67)	8.9 (0.35)	M5 x 0.8 (#10-32)	6.0 (0.24)	3.5 (0.14)	15.5 (0.61)
16mm (5/8")	4.6 (0.18)	18.5 (0.73)	9.4 (0.37)	M5 x 0.8 (#10-32)	8.0 (0.31)	3.5 (0.14)	20.0 (0.79)
20mm (3/4")	4.8 (0.19)	19.5 (0.77)	9.4 (0.37)	M5 x 0.8 (#10-32)	10.0 (0.39)	4.5 (0.18)	25.5 (1.00)
25mm (1")	5.1 (0.20)	22.5 (0.89)	10.9 (0.43)	M5 x 0.8 (#10-32)	12.0 (0.47)	5.0 (0.20)	28.0 (1.10)
32mm (1-1/4")	7.1 (0.28)	23.0 (0.91)	10.4 (0.41)	G - 1/8 (NPT 1/8)	16.0 (0.63)	7.0 (0.28)	34.0 (1.34)
40mm (1-1/2")	7.4 (0.29)	29.5 (1.16)	13.2 (0.52)	G - 1/8 (NPT 1/8)	16.0 (0.63)	7.0 (0.28)	40.0 (1.57)
50mm (2")	9.4 (0.37)	30.5 (1.20)	13.7 (0.54)	G - 1/4 (NPT 1/4)	20.0 (0.79)	8.0 (0.31)	50.0 (1.97)
63mm (2-1/2")	9.7 (0.38)	36.0 (1.42)	15.7 (0.62)	G - 1/4 (NPT 1/4)	20.0 (0.79)	8.0 (0.31)	60.0 (2.36)
80mm (3-1/4")	11.7 (0.46)	43.5 (1.71)	17.8 (0.70)	G - 3/8 (NPT 3/8)	25.0 (0.98)	10.0 (0.39)	77.0 (3.03)
100mm (4")	12.2 (0.48)	53.0 (2.09)	24.4 (0.96)	G - 3/8 (NPT 3/8)	30.0 (1.18)	12.0 (0.47)	94.0 (3.70)

Bore	I	J	K	L	M	N	O
12mm (1/2")	N/A	6.1 (0.24)	3.5 (0.14)	3.5 (0.14)	25.0 (0.98)	5.0 (0.19)	25.0 (0.98)
16mm (5/8")	8.7 (0.34)	6.5 (0.26)	3.5 (0.14)	3.5 (0.14)	29.0 (1.14)	6.0 (0.25)	29.0 (1.14)
20mm (3/4")	9.5 (0.37)	9.0 (0.35)	7.0 (0.28)	5.5 (0.22)	36.0 (1.42)	8.0 (0.31)	36.0 (1.42)
25mm (1")	10.3 (0.41)	9.0 (0.35)	7.0 (0.28)	5.5 (0.22)	40.0 (1.57)	10.0 (0.38)	40.0 (1.57)
32mm (1-1/4")	18.5 (0.73)	9.0 (0.35)	7.0 (0.28)	5.5 (0.22)	45.0 (1.77)	14.0 (0.56)	49.5 (1.95)
40mm (1-1/2")	17.3 (0.68)	9.0 (0.35)	7.0 (0.28)	5.5 (0.22)	52.0 (2.05)	14.0 (0.56)	57.0 (2.24)
50mm (2")	20.0 (0.79)	11.1 (0.44)	8.0 (0.31)	6.9 (0.27)	64.0 (2.52)	17.0 (0.69)	71.0 (2.80)
63mm (2-1/2")	20.0 (0.79)	14.1 (0.56)	10.5 (0.41)	8.8 (0.35)	77.0 (3.03)	17.0 (0.69)	84.0 (3.31)
80mm (3-1/4")	26.0 (1.02)	17.5 (0.69)	13.5 (0.53)	11.0 (0.43)	98.0 (3.86)	22.0 (0.88)	104.0 (4.09)
100mm (4")	26.0 (1.02)	17.5 (0.69)	13.5 (0.53)	11.0 (0.43)	117.0 (4.61)	27.0 (1.06)	123.5 (4.86)

Bore	P	Q	R
12mm (1/2")	32.0 (1.26)	5.3 (0.21)	M3 x 0.5 6H (#8-32 UNC-2B)
16mm (5/8")	38.0 (1.50)	7.8 (0.31)	M4 x 0.7 6H (#8-32 UNC-2B)
20mm (3/4")	47.0 (1.85)	10.5 (0.41)	M5 x 0.8 6H (#10-32 UNF-2B)
25mm (1")	52.0 (2.05)	11.5 (0.45)	M6 x 1.0 6H (1/4-28 UNF-2B)
32mm (1-1/4")	60.0 (2.36)	17.7 (0.70)	M8 x 1.25 6H (5/16-24 UNF-2B)
40mm (1-1/2")	69.0 (2.72)	24.5 (0.96)	M8 x 1.25 6H (3/8-24 UNF-2B)
50mm (2")	86.0 (3.39)	29.3 (1.16)	M10 x 1.5 6H (1/2-20 UNF-2B)
63mm (2-1/2")	103.0 (4.06)	29.1 (1.15)	M10 x 1.5 6H (1/2-20 UNF-2B)
80mm (3-1/4")	132.0 (5.20)	28.1 (1.11)	M16 x 2.0 6H (5/8-18 UNF-2B)
100mm (4")	156.0 (6.14)	32.3 (1.27)	M20 x 2.5 6H (3/4-16 UNF-2B)

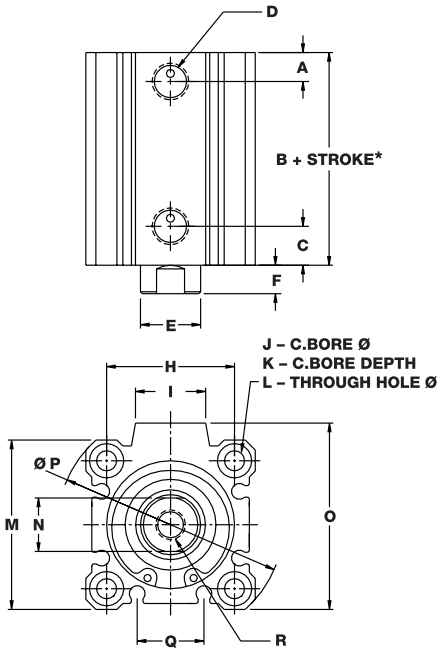

**See page 2.56 for overall body length with MRS option.*

When option E is specified, user interface threads are designated U.S. customary (inch). This includes ports, rod threads and threaded mounting options (as applicable).

Dimensions

Shown in millimeters (inches)

Double Acting/Double Rod

Bore		A		B		D		E		F		H		I	
12mm	(1/2")	10.6	(0.42)	25.2	(0.99)	M5 x 0.8	(#10-32)	6.0	(0.24)	3.5	(0.14)	15.5	(0.61)	N/A	
16mm	(5/8")	10.7	(0.42)	26.0	(1.03)	M5 x 0.8	(#10-32)	8.0	(0.31)	3.5	(0.14)	20.0	(0.79)	8.7	(0.34)
20mm	(3/4")	10.1	(0.40)	26.0	(1.03)	M5 x 0.8	(#10-32)	10.0	(0.39)	4.5	(0.18)	25.5	(1.00)	9.5	(0.37)
25mm	(1")	11.2	(0.44)	29.0	(1.14)	M5 x 0.8	(#10-32)	12.0	(0.47)	5.0	(0.20)	28.0	(1.10)	10.3	(0.41)
32mm	(1-1/4")	8.9	(0.35)	30.5	(1.20)	G - 1/8	(NPT 1/8)	16.0	(0.63)	7.0	(0.28)	34.0	(1.34)	18.5	(0.73)
40mm	(1-1/2")	13.1	(0.52)	40.0	(1.58)	G - 1/8	(NPT 1/8)	16.0	(0.63)	7.0	(0.28)	40.0	(1.57)	17.3	(0.68)
50mm	(2")	12.2	(0.48)	40.5	(1.60)	G - 1/4	(NPT 1/4)	20.0	(0.79)	8.0	(0.31)	50.0	(1.97)	20.0	(0.79)
63mm	(2-1/2")	12.8	(0.50)	42.0	(1.66)	G - 1/4	(NPT 1/4)	20.0	(0.79)	8.0	(0.31)	60.0	(2.36)	20.0	(0.79)
80mm	(3-1/4")	14.4	(0.57)	51.0	(2.01)	G - 3/8	(NPT 3/8)	25.0	(0.98)	10.0	(0.39)	77.0	(3.03)	26.0	(1.02)
100mm	(4")	18.3	(0.72)	60.5	(2.32)	G - 3/8	(NPT 3/8)	30.0	(1.18)	12.0	(0.47)	94.0	(3.70)	26.0	(1.02)

Bore		J		K		L		M		N		O		P	
12mm	(1/2")	6.1	(0.24)	3.5	(0.14)	3.5	(0.14)	25.0	(0.98)	5.0	(0.19)	25.0	(0.98)	32.0	(1.26)
16mm	(5/8")	6.5	(0.26)	3.5	(0.14)	3.5	(0.14)	29.0	(1.14)	6.0	(0.25)	29.0	(1.14)	38.0	(1.50)
20mm	(3/4")	9.0	(0.35)	7.0	(0.28)	5.5	(0.22)	36.0	(1.42)	8.0	(0.31)	36.0	(1.42)	47.0	(1.85)
25mm	(1")	9.0	(0.35)	7.0	(0.28)	5.5	(0.22)	40.0	(1.57)	10.0	(0.38)	40.0	(1.57)	52.0	(2.05)
32mm	(1-1/4")	9.0	(0.35)	7.0	(0.28)	5.5	(0.22)	45.0	(1.77)	14.0	(0.56)	49.5	(1.95)	60.0	(2.36)
40mm	(1-1/2")	9.0	(0.35)	7.0	(0.28)	5.5	(0.22)	52.0	(2.05)	14.0	(0.56)	57.0	(2.24)	69.0	(2.72)
50mm	(2")	11.1	(0.44)	8.0	(0.31)	6.9	(0.27)	64.0	(2.52)	17.0	(0.69)	71.0	(2.80)	86.0	(3.39)
63mm	(2-1/2")	14.1	(0.56)	10.5	(0.41)	8.8	(0.35)	77.0	(3.03)	17.0	(0.69)	84.0	(3.31)	103.0	(4.06)
80mm	(3-1/4")	17.5	(0.69)	13.5	(0.53)	11.0	(0.43)	98.0	(3.86)	22.0	(0.88)	104.0	(4.09)	132.0	(5.20)
100mm	(4")	17.5	(0.69)	13.5	(0.53)	11.0	(0.43)	117.0	(4.61)	27.0	(1.06)	123.5	(4.86)	156.0	(6.14)

Bore		Q		R		V	
12mm	(1/2")	5.3	(0.21)	M3 x 0.5 6H	(#8-32 UNC-2B)	32.4	(1.27)
16mm	(5/8")	7.8	(0.31)	M4 x 0.7 6H	(#8-32 UNC-2B)	33.2	(1.31)
20mm	(3/4")	10.5	(0.41)	M5 x 0.8 6H	(#10-32 UNF-2B)	35.2	(1.39)
25mm	(1")	11.5	(0.45)	M6 x 1.0 6H	(1/4-28 UNF-2B)	39.2	(1.54)
32mm	(1-1/4")	17.7	(0.70)	M8 x 1.25 6H	(5/16-24 UNF-2B)	44.7	(1.76)
40mm	(1-1/2")	24.5	(0.96)	M8 x 1.25 6H	(3/8-24 UNF-2B)	54.2	(2.14)
50mm	(2")	29.3	(1.16)	M10 x 1.5 6H	(1/2-20 UNF-2B)	56.3	(2.22)
63mm	(2-1/2")	29.1	(1.15)	M10 x 1.5 6H	(1/2-20 UNF-2B)	57.8	(2.28)
80mm	(3-1/4")	28.1	(1.11)	M16 x 2.0 6H	(5/8-18 UNF-2B)	70.8	(2.79)
100mm	(4")	32.3	(1.27)	M20 x 2.5 6H	(3/4-16 UNF-2B)	84.3	(3.26)

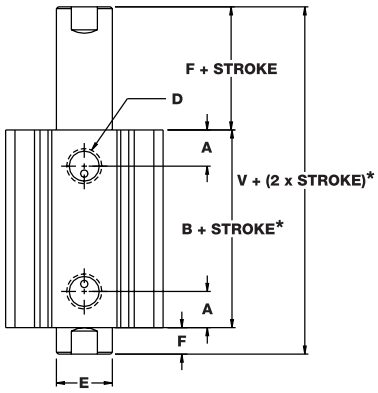

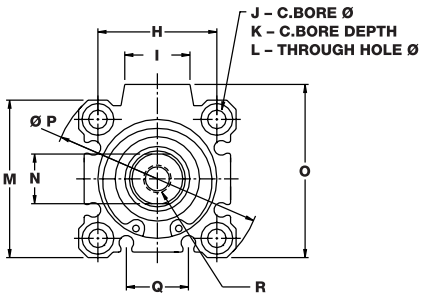

**See page 2.56 for overall body length with MRS option.*

When option E is specified, user interface threads are designated U.S. customary (inch). This includes ports, rod threads and threaded mounting options (as applicable).

Dimensions

Shown in millimeters (inches)

Spring Retract/Spring Extend

Bore		A		B		C		D		E		F	
12mm	(1/2")	3.8	(0.15)	17.0	(0.67)	8.9	(0.35)	M5 x 0.8	(#10-32)	6.0	(0.24)	3.5	(0.14)
16mm	(5/8")	4.6	(0.18)	18.5	(0.73)	9.4	(0.37)	M5 x 0.8	(#10-32)	8.0	(0.31)	3.5	(0.14)
20mm	(3/4")	4.8	(0.19)	19.5	(0.77)	9.4	(0.37)	M5 x 0.8	(#10-32)	10.0	(0.39)	4.5	(0.18)
25mm	(1")	5.1	(0.20)	22.5	(0.89)	10.9	(0.43)	M5 x 0.8	(#10-32)	12.0	(0.47)	5.0	(0.20)
32mm	(1-1/4")	7.1	(0.28)	23.0	(0.91)	10.4	(0.41)	G - 1/8	(NPT 1/8)	16.0	(0.63)	7.0	(0.28)
40mm	(1-1/2")	7.4	(0.29)	29.5	(1.16)	13.2	(0.52)	G - 1/8	(NPT 1/8)	16.0	(0.63)	7.0	(0.28)
50mm	(2")	9.4	(0.37)	30.5	(1.20)	13.7	(0.54)	G - 1/4	(NPT 1/4)	20.0	(0.79)	8.0	(0.31)
63mm	(2-1/2")	9.7	(0.38)	36.0	(1.42)	15.7	(0.62)	G - 1/4	(NPT 1/4)	20.0	(0.79)	8.0	(0.31)
80mm	(3-1/4")	11.7	(0.46)	43.5	(1.71)	17.8	(0.70)	G - 3/8	(NPT 3/8)	25.0	(0.98)	10.0	(0.39)

Spring Retract (Model EFS)

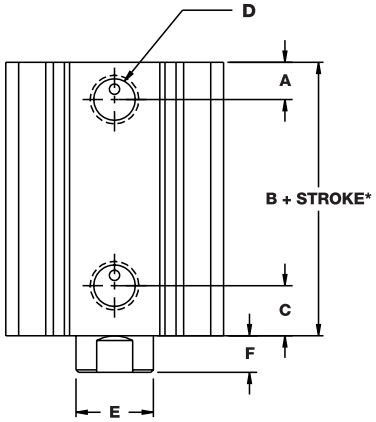

Spring Extend (Model EFR)

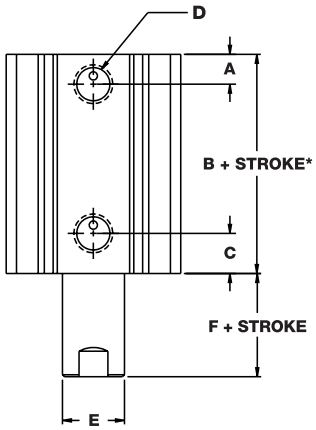

**See page 2.56 for overall body length with MRS option.*

When option E is specified, user interface threads are designated U.S. customary (inch). This includes ports, rod threads and threaded mounting options (as applicable).

Weights

Bore		Approximate Base Weight of Cylinder gram-force (oz.)		Weight Adder per 5mm of Stroke gram-force (oz.)	
12mm	(1/2")	21.8	(0.77)	5.6	(0.20)
16mm	(5/8")	38.7	(1.36)	8.0	(0.28)
20mm	(3/4")	46.4	(1.64)	11.5	(0.41)
25mm	(1")	73.1	(2.58)	14.6	(0.52)
32mm	(1-1/4")	113.3	(4.00)	20.9	(0.74)
40mm	(1-1/2")	181.4	(6.40)	21.3	(0.75)
50mm	(2")	294.0	(10.37)	33.6	(1.19)
63mm	(2-1/2")	484.5	(17.09)	40.7	(1.44)
80mm	(3-1/4")	885.2	(31.23)	62.6	(2.21)
100mm	(4")	1885.9	(66.52)	110.1	(3.89)

Mounting Options

Threaded Bottom Mount (-1) (EF1 models only)

Bore		H		T		U	
12mm	(1/2")	15.5	(0.61)	M4 x 0.7 6H	(8-32 UNC-2B)	6.6	(0.26)
16mm	(5/8")	20.0	(0.79)	M4 x 0.7 6H	(8-32 UNC-2B)	6.6	(0.26)
20mm	(3/4")	25.5	(1.00)	M6 x 1.0 6H	(1/4-20 UNC-2B)	11.2	(0.44)
25mm	(1")	28.0	(1.10)	M6 x 1.0 6H	(1/4-20 UNC-2B)	11.2	(0.44)
32mm	(1-1/4")	34.0	(1.34)	M6 x 1.0 6H	(1/4-20 UNC-2B)	11.2	(0.44)
40mm	(1-1/2")	40.0	(1.57)	M6 x 1.0 6H	(1/4-20 UNC-2B)	11.2	(0.44)
50mm	(2")	50.0	(1.97)	M8 x 1.25 6H	(5/16-18 UNC-2B)	13.0	(0.51)
63mm	(2-1/2")	60.0	(2.36)	M10 x 1.5 6H	(7/16-14 UNC-2B)	16.8	(0.66)
80mm	(3-1/4")	77.0	(3.03)	M12 x 1.75 6H	(1/2-13 UNC-2B)	20.8	(0.82)
100mm	(4")	94.0	(3.70)	M12 x 1.75 6H	(1/2-13 UNC-2B)	20.8	(0.82)

Note: On the following models, only the front set of threaded bottom mounting holes is provided; EF-205, EF-2010, EF-255, EF-325, EF-8010.

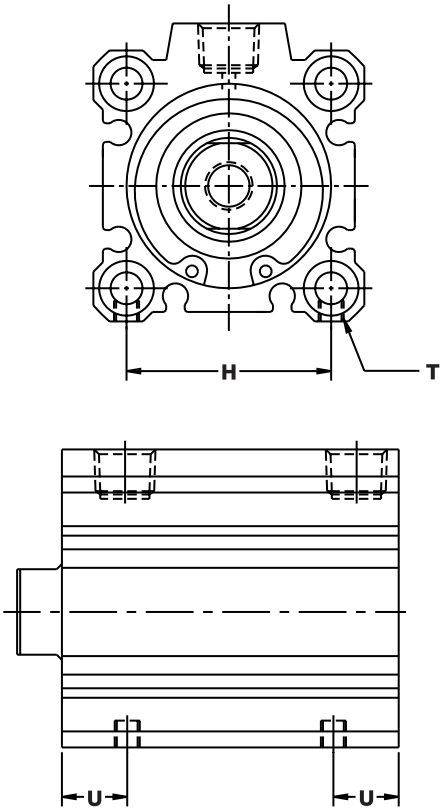

Threaded Front/Rear Mount (-3)

Bore		W		X		Y	
12mm	(1/2")	M4 x 0.7	(8-32 UNC)	10.5	(0.41)	7.0	(0.28)
16mm	(5/8")	M4 x 0.7	(8-32 UNC)	10.5	(0.41)	7.0	(0.28)
20mm	(3/4")	M6 x 1.0	(1/4-20 UNC)	17.0	(0.67)	10.0	(0.39)
25mm	(1")	M6 x 1.0	(1/4-20 UNC)	17.0	(0.67)	10.0	(0.39)
32mm	(1-1/4")	M6 x 1.0	(1/4-20 UNC)	17.0	(0.67)	10.0	(0.39)
40mm	(1-1/2")	M6 x 1.0	(1/4-20 UNC)	17.0	(0.67)	10.0	(0.39)
50mm	(2")	M8 x 1.25	(5/16-18 UNC)	22.0	(0.87)	14.0	(0.55)
63mm	(2-1/2")	M10 x 1.5	(7/16-14 UNC)	28.5	(1.12)	18.0	(0.71)
80mm	(3-1/4")	M12 x 1.75	(1/2-13 UNC)	35.6	(1.40)	22.0	(0.87)
100mm	(4")	M12 x 1.75	(1/2-13 UNC)	35.6	(1.40)	22.0	(0.87)

Note: On EFT models, there are two threaded holes per end, not four.

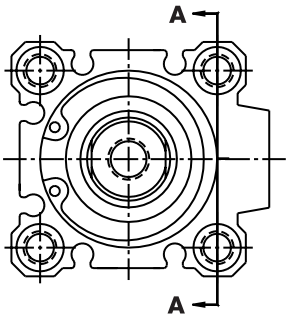

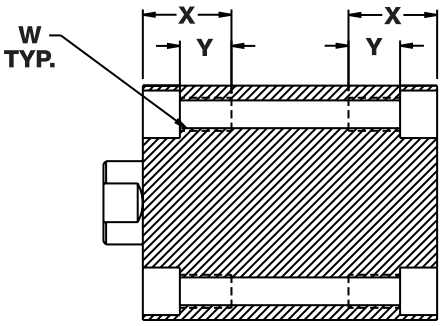

SECTION "A-A"

Options

Male Rod End (MT)

Bore		Standard						With Option E					
		AA	BB		F			AA	BB		F		
12mm	(1/2")	M5 x 0.80	10.5	(0.41)	14.0	(0.55)		#8-32 UNC	8.0	(0.31)	11.5	(0.45)	
16mm	(5/8")	M6 x 1.00	12.0	(0.47)	15.5	(0.61)		#8-32 UNC	8.0	(0.31)	11.5	(0.45)	
20mm	(3/4")	M8 x 1.25	14.0	(0.55)	18.5	(0.73)		#10-32 UNF	8.0	(0.31)	12.5	(0.49)	
25mm	(1")	M10 x 1.25	17.5	(0.69)	22.5	(0.89)		1/4-28 UNF	9.5	(0.37)	14.5	(0.57)	
32mm	(1-1/4")	M14 x 1.5	23.5	(0.93)	28.5	(1.12)		5/16-24 UNF	12.7	(0.50)	19.7	(0.78)	
40mm	(1-1/2")	M14 x 1.5	23.5	(0.93)	28.5	(1.12)		3/8-24 UNF	16.0	(0.63)	23.0	(0.91)	
50mm	(2")	M18 x 1.5	28.5	(1.12)	33.5	(1.32)		1/2-20 UNF	19.5	(0.77)	27.5	(1.08)	
63mm	(2-1/2")	M18 x 1.5	28.5	(1.12)	33.5	(1.32)		1/2-20 UNF	19.5	(0.77)	27.5	(1.08)	
80mm	(3-1/4")	M22 x 1.5	35.5	(1.40)	43.5	(1.71)		5/8-18 UNF	25.5	(1.00)	35.5	(1.40)	
100mm	(4")	M26 x 1.5	32.5	(1.28)	43.5	(1.71)		3/4-16 UNF	28.5	(1.12)	40.5	(1.59)	

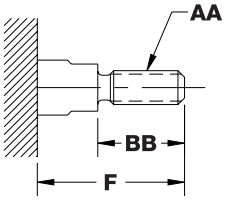

Rear Clevis Mount (6, 6N)

Stroke	A		B		C		D		E		F	
12m	20	(0.79)	14	(0.55)	7	(0.28)	25	(0.98)	10	(0.39)	5	(0.21)
16m	21	(0.83)	15	(0.59)	10	(0.39)	29	(1.14)	12	(0.47)	7	(0.27)
20m	27	(1.06)	18	(0.71)	12	(0.47)	36	(1.41)	16	(0.62)	8	(0.33)
25m	30	(1.18)	20	(0.79)	14	(0.55)	40	(1.57)	20	(0.78)	10	(0.41)
32m	30	(1.18)	20	(0.79)	14	(0.55)	45	(1.77)	36	(1.41)	18	(0.72)
40m	32	(1.26)	22	(0.87)	14	(0.55)	52	(2.04)	36	(1.41)	18	(0.72)
50m	42	(1.65)	28	(1.10)	20	(0.79)	64	(2.52)	44	(1.72)	22	(0.87)
63m	44	(1.73)	30	(1.18)	20	(0.79)	77	(3.03)	44	(1.72)	22	(0.87)
80m	56	(2.21)	38	(1.50)	27	(1.06)	98	(3.85)	56	(2.20)	28	(1.11)
100m	67	(2.64)	45	(1.77)	31	(1.22)	117	(4.60)	64	(2.51)	32	(1.27)

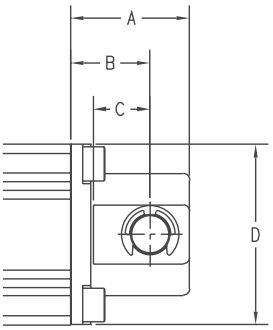

Bore	G		HØ (PIN)		I		J	
12mm	13	(0.51)	5	(0.197)	M4x0.7	(#8-32 UNC)	15.5	(0.61)
16mm	15	(0.58)	5	(0.197)	M4x0.7	(#8-32 UNC)	20	(0.79)
20mm	21	(0.82)	8	(0.315)	M6x1.0	(1/4-20 UNC)	25.5	(1.00)
25mm	22	(0.85)	10	(0.394)	M6x1.0	(1/4-20 UNC)	28	(1.10)
32mm	39	(1.53)	10	(0.394)	M6x1.0	(1/4-20 UNC)	34	(1.34)
40mm	39	(1.53)	10	(0.394)	M6x1.0	(1/4-20 UNC)	40	(1.58)
50mm	49	(1.91)	14	(0.551)	M8x1.25	(5/16-18 UNC)	50	(1.97)
63mm	49	(1.91)	14	(0.551)	M10x1.5	(7/16-14 UNC)	60	(2.36)
80mm	62	(2.44)	18	(0.709)	M12x1.75	(1/2-13 UNC)	77	(3.03)
100mm	72	(2.84)	22	(0.866)	M12x1.75	(1/2-13 UNC)	94	(3.70)

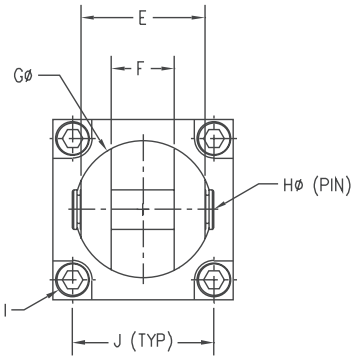

Magnetic Position Sensing (M)
(Body Lengths With MRS Option)

Bore		B			
		Double Acting Single Rod		Double Acting Double Rod	
12mm	(1/2")	27.0	(1.06)	32.4	(1.28)
16mm	(5/8")	28.5	(1.12)	36.0	(1.42)
20mm	(3/4")	29.5	(1.16)	36.0	(1.42)
25mm	(1")	32.5	(1.28)	39.0	(1.54)
32mm	(1-1/4")	33.0	(1.30)	40.5	(1.59)
40mm	(1-1/2")	39.5	(1.56)	50.0	(1.97)
50mm	(2")	40.5	(1.59)	50.5	(1.99)
63mm	(2-1/2")	46.0	(1.81)	52.0	(2.05)
80mm	(3-1/4")	53.5	(2.11)	61.0	(2.40)
100mm	(4")	63.0	(2.48)	70.5	(2.78)

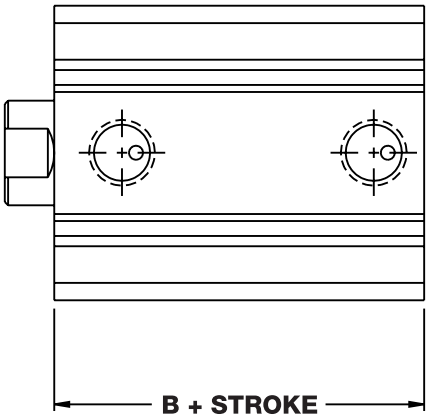

Bumpers
(Stroke reduction by model for all bores)

Model	Stroke Reduction mm (inches)
Double Acting Single Rod End Double Acting Double Rod End	3.0 (.12)
Single Acting Spring Retract Reverse Acting Spring Extend	1.5 (.06)

Extruded Flat Repair Kits

For bore sizes of 12, 16, and 20, each Extruded Flat Basic Kit includes the appropriate rod guide, rod seal, piston seals, cylinder, body seals, and instructions. For larger bore sizes (25mm and up), a rod bushing is included instead of the rod guide. Please note that EF repair kits will work on EF2 cylinders.

To order, please provide the correct bore code in the kit part number blank. Specialty seals are designated by their suffix option.

Repair Kit
K-B-EF-__
K-B-EFD-__
K-B-EF-__-V
K-B-EFD-__-V

Accessories

Rod Pivot List Prices

Model Number	Bore	List Price
RP(M,E)K-12	12mm (1/2")	$26.35
RP(M,E)K-16	16mm (5/8")	27.90
RP(M,E)K-20	20mm (3/4")	31.75
RP(M,E)K-25	25mm (1")	33.65
RP(M,E)K-32	32mm (1-1/4")	35.85
RP(M,E)K-40	40mm (1-1/2")	
RP(M,E)K-50	50mm (2")	37.50
	63mm (2-1/2")	
RP(M,E)K-80	80mm (3-1/4")	38.45
RP(M,E)K-100	100mm (4")	40.05

Note: To use Rod Pivot, cylinder must be specified with male thread option (MT).

For inch series Rod Pivot Kits, change the third digit from an M to an E.
For example: RPMK-32 is a metric size / RPEK-32 is a U.S. customary size.

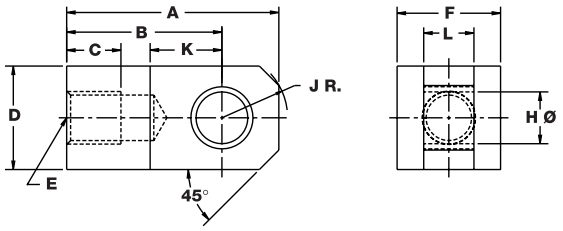

Metric Small Bore Rod Pivot (for 12mm to 63mm bore cylinders)

RPMK-12, RPMK-16, RPMK-20, RPMK-25, RPMK-32, RPMK-40, RPMK-50

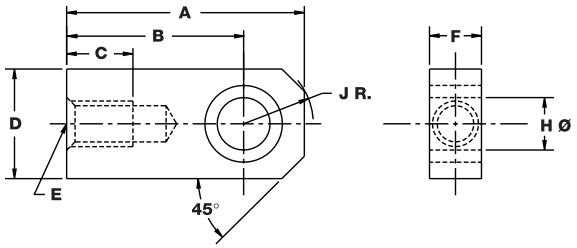

U.S. Customary Small Bore Rod Pivot (for 12mm to 63mm bore cylinders)

RPEK-12, RPEK-16, RPEK-20, RPEK-25, RPEK-32, RPEK-40, RPEK-50

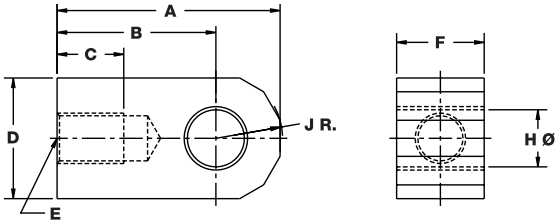

Metric and U.S. Customary Large Bore Rod Pivot (for 80mm and 100mm bore cylinders)

RPMK-80, RPEK-80, RPMK-100, RPEK-100

Rod Pivot Dimensions

Model Number	Bore	A	B	C	D	E
RP(M,E)K-12	12mm (1/2")	21.5 (0.85)	16.0 (0.63)	6.0 (0.24)	10.0 (0.39)	M5 x 0.8 (# 8-32 UNC)
RP(M,E)K-16	16mm (5/8")	32.0 (1.26)	25.0 (0.98)	8.0 (0.24)	12.0 (0.47)	M6 x 1.0 (# 8-32 UNC)
RP(M,E)K-20	20mm (3/4")	34.0 (1.34)	25.0 (0.98)	8.5 (0.24)	15.9 (0.63)	M8 x 1.25 (# 10-32 UNF)
RP(M,E)K-25	25mm (1")	41.0 (1.61)	30.0 (1.18)	10.5 (0.32)	20.0 (0.79)	M10 x 1.25 (1/4-28 UNF)
RP(M,E)K-32	32mm (1-1/4")	40.5 (1.59)	30.0 (1.18)	14.0 (0.35)	22.0 (0.87)	M14 x 1.5 (5/16-24 UNF)
RP(M,E)K-40	40mm (1-1/2")	40.5 (1.59)	30.0 (1.18)	14.0 (0.43)	22.0 (0.87)	M14 x 1.5 (3/8-24 UNF)
RP(M,E)K-50	50mm (2") 63mm (2-1/2")	53.8 (2.12)	40.0 (1.58)	18.0 (0.71)	28.0 (1.10)	M18 x 1.5 (1/2-20 UNF)
RP(M,E)K-80	80mm (3-1/4")	70.2 (2.77)	50.0 (1.97)	21.0 (0.83)	38.0 (1.50)	M22 x 1.5 (5/8-18 UNF)
RP(M,E)K-100	100mm (4")	77.9 (3.07)	55.0 (2.17)	21.0 (0.83)	44.0 (1.73)	M26 x 1.5 (3/4-16 UNF)

Model Number	Bore Size	F	H	J	K	L
RP(M,E)K-12	12mm (1/2")	10.0 (0.19)	5.0 (0.188)	6.2 (0.25)	6.9 N/A	4.7 N/A
RP(M,E)K-16	16mm (5/8")	12.0 (0.24)	5.0 (0.188)	7.8 (0.31)	13.9 N/A	6.2 N/A
RP(M,E)K-20	20mm (3/4")	15.9 (0.30)	8.0 (0.313)	10.2 (0.41)	11.4 N/A	7.7 N/A
RP(M,E)K-25	25mm (1")	20.0 (0.38)	10.0 (0.375)	12.6 (0.50)	13.9 N/A	9.7 N/A
RP(M,E)K-32	32mm (1-1/4")	22.0 (0.69)	10.0 (0.375)	11.9 (0.47)	13.9 N/A	17.6 N/A
RP(M,E)K-40	40mm (1-1/2")	22.0 (0.69)	10.0 (0.375)	11.9 (0.47)	13.9 N/A	17.6 N/A
RP(M,E)K-50	50mm (2") 63mm (2-1/2")	28.0 (0.85)	14.0 (0.500)	15.9 (0.63)	19.9 N/A	21.6 N/A
RP(M,E)K-80	80mm (3-1/4")	27.6 (1.09)	18.0 (0.750)	21.0 (0.83)	N/A	N/A
RP(M,E)K-100	100mm (4")	31.6 (1.24)	22.0 (0.875)	24.0 (0.94)	N/A	N/A

How to Order

The Model Number for the EF2 cylinder consists of three alphanumeric clusters. These designate type, bore size and stroke length, and options. Please refer to the charts below for an example of Model Number EFT-3225-3M. This is a 32mm bore, double acting, guided cylinder with metric threads and ports, 25mm stroke, threaded front/rear mounting holes, and magnetic position sensing.

TYPE
EFT – Double Acting, Non-rotating
EFDT – Double Acting, Double End Rod, Non-rotating

BORE SIZE mm (inch)**	
12mm – (1/2")	40mm – (1-1/2")
16mm – (5/8")	50mm – (2")
20mm – (3/4")	63mm – (2-1/2")
25mm – (1")	80mm – (3-1/4")
32mm – (1-1/4")	100mm – (4")

STROKE LENGTH***
See table - page 2.59

EFT-3225-3M

MOUNTING OPTIONS
(Enter in numeric order)
No Number - Basic model
3 - Threaded front/rear mounting option*
6 - Rear clevis mount*
6N - Rear clevis 90°

**For dimensions, see page 2.54.*

OPTIONS
(Enter in alphabetical order, except for EE which is last)
B – Bumpers (see page 2.67)[1]
C – Stainless steel retaining ring
E – U.S. customary units (inch)[2]
F – Full-flow port orifice[4]
M – Magnetic position sensing (see table page 2.67)[3]
P – Blank tooling plate
V – High temperature option -10°C to 110°C (15°F to 225°F)
X – Rear guide shaft extension (see page 2.65)[5]
EE – Extra rod extension in 1mm increments[6]

[1]Bumpers reduce stroke length by 3mm. When bumper is specified with option V, standard bumper material is supplied. Operating temperature remains -10° to 70°C (15° to 160°F).

[2]When option E is specified, user interface threads are designated U.S. customary (inch). This includes ports, rod threads and threaded mounting options (as applicable).

[3]When magnetic position sensing is specified with option V, operating temperature remains -10° to 70°C (15° to 160°F). This combination is recommended when fluoroelastomer is specified for compatibility.

[4]Automatically includes bumpers, so stroke is reduced by 3mm.

[5]Available stroke lengths starting at 10mm.

[6]In EFDT models, extra extension dimension is added to both tooling plate and rod ends.

Please note that throughout all catalog charts, metric measurements are shown first and U.S. customary units (inches) are in parentheses.

***NOTE: Numbers in parentheses are the equivalent bore size in inches and listed FOR REFERENCE ONLY. DO NOT use for model designation.*

****When stroke length exceeds 30mm, a threaded mounting option should be considered. Mounting bolts that span the entire cylinder length may not be readily available.*

Bimba EF2 Cylinders

Bimba is a JIT manufacturer and we are able to provide EFT model cylinders in *ANY 1mm or stroke length increment for all option styles within our standard three-day lead time*. Longer stroke lengths are also available upon request at standard lead times. Please consult Technical Assistance at 800-44-BIMBA for help.

The table below represents our standard stroke lengths. **Blue** stroke lengths are EF cylinders with -3EM options in stock available for Same Day Shipping.

Stroke Length Availability

Nominal Bore Diameter	EFT Single Rod End (mm)
12mm (1/2")	5, 10, **15**, 20, **25**, 30
16mm (5/8")	5, **10**, 15, 20, 25, 30
20mm (3/4")	5, **10**, 15, 20, **25**, 30, 35, **40**, 45, **50**
25mm (1")	5, **10**, 15, 20, **25**, 30, 35, **40**, 45, **50**
32mm (1-1/4")	5, **10**, 15, 20, **25**, 30, 35, **40**, 45, **50**, 75, 100
40mm (1-1/2")	5, 10, **15**, 20, **25**, 30, 35, **40**, 45, **50**, **75**, 100
50mm (2")	10, 15, 20, **25**, 30, 35, **40**, 45, **50**, **75**, **100**
63mm (2-1/2")	10, 15, 20, 25, 30, 35, 40, 45, 50, 75, 100
80mm (3-1/4")	10, 15, 20, **25**, 30, 35, **40**, 45, **50**, 75, 100
100mm (4")	10, 15, 20, 25, 30, 35, 40, 45, 50, 75, 100

List Prices

Model Type	Bore Size									
	12mm	16mm	20mm	25mm	32mm	40mm	50mm	63mm	80mm	100mm
EFT	$ 45.95	$ 51.70	$ 59.15	$ 66.65	$ 83.60	$ 96.90	$112.20	$129.65	$154.10	$206.30
Add per 5mm	2.30	2.30	2.30	2.60	2.60	2.60	3.25	3.75	4.05	4.85
EFDT	57.65	63.55	72.45	79.70	98.00	115.35	132.45	158.15	190.45	260.65
Add per 5mm	3.10	3.00	3.00	3.10	3.10	3.35	4.15	4.75	5.25	6.55
Mounting Options										
3	$ 6.40	$ 6.65	$ 8.80	$ 9.10	$ 10.25	$ 10.45	$ 11.45	$ 12.10	$ 12.75	$ 13.30
6, 6N (EFT)	12.50	13.10	14.10	16.30	17.80	19.95	23.05	29.90	36.45	48.55
Options										
B	$ 3.80	$ 6.65	$ 6.65	$ 6.65	$ 7.85	$ 7.85	$ 8.95	$ 10.75	$ 16.40	$ 18.90
C (EFT)	3.10	3.35	4.45	4.95	6.05	9.05	15.50	18.50	121.20	207.40
C (EFDT)	6.00	6.25	8.60	9.75	11.75	17.65	30.30	36.15	178.80	290.50
F (includes B)	10.25	13.20	13.20	14.90	16.20	16.20	18.85	20.80	26.65	29.85
M	5.65	6.90	9.05	9.05	11.15	11.15	13.10	16.00	20.40	23.90
V (EFT)	12.45	13.75	14.10	17.05	19.05	27.10	29.85	38.65	47.35	59.80
V (EFDT)	14.25	16.30	16.60	22.15	25.40	36.65	40.40	52.85	61.10	68.90
X (base)	6.05	6.95	8.95	10.45	14.30	15.95	17.40	17.50	18.55	19.45
Add per 5mm	1.30	1.30	1.30	1.35	1.35	1.40	1.70	1.90	2.05	2.50
EE (per 1mm)	0.55	0.55	0.55	0.70	0.70	0.70	0.85	0.85	1.05	1.05

No charge options: E (U.S. Customary Units), P.

EFT Cylinders

Maximum Side Loads kg-Force (lb)

Bore	Stroke Length						
	5mm	10mm	15mm	20mm	25mm	30mm	35mm
12mm (1/2")	1.79 (3.94)	1.47 (3.24)	1.25 (2.75)	1.08 (2.39)	0.96 (2.11)	0.86 (1.89)	N/A
16mm (5/8")	2.60 (5.72)	2.16 (4.76)	1.85 (4.08)	1.62 (3.57)	1.44 (3.17)	1.30 (2.86)	N/A
20mm (3/4")	5.09 (11.23)	4.36 (9.62)	3.82 (8.42)	3.39 (7.48)	3.06 (6.74)	2.78 (6.13)	2.55 (5.62)
25mm (1")	5.22 (11.50)	4.48 (9.88)	3.93 (8.66)	3.50 (7.71)	3.15 (6.94)	2.86 (6.32)	2.63 (5.80)
32mm (1-1/4")	5.54 (12.22)	4.80 (10.59)	4.24 (9.35)	3.80 (8.37)	3.44 (7.58)	3.14 (6.91)	2.89 (6.36)
40mm (1-1/2")	6.53 (14.40)	5.69 (12.55)	5.04 (11.12)	4.53 (9.98)	4.11 (9.06)	3.76 (8.28)	3.47 (7.64)
50mm (2")	N/A	8.94 (19.71)	8.03 (17.71)	7.30 (16.09)	6.68 (14.74)	6.17 (13.60)	5.73 (12.62)
63mm (2-1/2")	N/A	14.49 (31.95)	13.16 (29.01)	12.06 (26.58)	11.12 (24.51)	10.32 (22.76)	9.63 (21.23)
80mm (3-1/4")	N/A	23.59 (52.02)	21.70 (47.85)	20.09 (44.30)	18.71 (41.24)	17.50 (38.58)	16.43 (36.23)
100mm (4")	N/A	26.22 (57.80)	24.24 (53.45)	22.55 (49.71)	21.07 (46.46)	19.78 (43.61)	18.64 (41.08)

Bore	Stroke Length				
	40mm	45mm	50mm	75mm	100mm
12mm (1/2")	N/A	N/A	N/A	N/A	N/A
16mm (5/8")	N/A	N/A	N/A	N/A	N/A
20mm (3/4")	2.35 (5.19)	2.19 (4.82)	2.04 (4.50)	N/A	N/A
25mm (1")	2.43 (5.35)	2.26 (4.98)	2.11 (4.64)	N/A	N/A
32mm (1-1/4")	2.68 (5.90)	2.49 (5.48)	2.33 (5.13)	1.76 (3.89)	1.42 (3.13)
40mm (1-1/2")	3.22 (7.09)	3.00 (6.60)	2.80 (6.18)	2.13 (4.70)	1.72 (3.79)
50mm (2")	5.34 (11.78)	5.01 (11.03)	4.71 (10.39)	3.64 (8.02)	2.96 (6.53)
63mm (2-1/2")	9.03 (19.90)	8.49 (18.72)	8.02 (17.67)	6.27 (13.82)	5.15 (11.35)
80mm (3-1/4")	15.49 (34.16)	14.66 (32.32)	13.91 (30.66)	11.07 (24.40)	9.19 (20.27)
100mm (4")	17.61 (38.83)	16.70 (36.82)	15.88 (35.00)	12.74 (28.08)	10.63 (23.44)

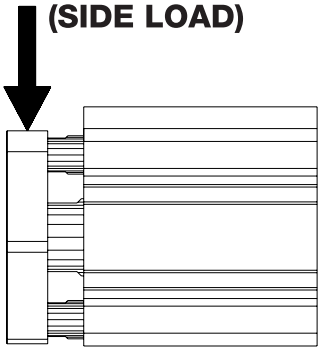

Maximum Moments N-m (in-lb)

Bore	Stroke Length						
	5mm	10mm	15mm	20mm	25mm	30mm	35mm
12mm (1/2")	0.08 (0.72)	0.07 (0.59)	0.06 (0.50)	0.05 (0.44)	0.04 (0.39)	0.04 (0.35)	N/A
16mm (5/8")	0.16 (1.39)	0.13 (1.16)	0.11 (1.00)	0.10 (0.87)	0.09 (0.78)	0.08 (0.70)	N/A
20mm (3/4")	0.42 (3.72)	0.36 (3.20)	0.32 (2.81)	0.28 (2.50)	0.25 (2.25)	0.23 (2.05)	0.21 (1.88)
25mm (1")	0.45 (4.02)	0.39 (3.46)	0.34 (3.04)	0.31 (2.71)	0.28 (2.45)	0.25 (2.23)	0.23 (2.05)
32mm (1-1/4")	0.50 (4.45)	0.44 (3.88)	0.39 (3.44)	0.35 (3.09)	0.32 (2.81)	0.29 (2.57)	0.27 (2.37)
40mm (1-1/2")	0.59 (5.24)	0.52 (4.57)	0.46 (4.05)	0.41 (3.64)	0.37 (3.31)	0.34 (3.03)	0.32 (2.79)
50mm (2")	N/A	1.13 (10.04)	1.02 (9.06)	0.93 (8.26)	0.86 (7.59)	0.79 (7.02)	0.74 (6.53)
63mm (2-1/2")	N/A	2.35 (20.84)	2.15 (18.99)	1.97 (17.44)	1.82 (16.13)	1.69 (15.00)	1.58 (14.01)
80mm (3-1/4")	N/A	4.72 (41.75)	4.35 (38.51)	4.04 (35.75)	3.77 (33.35)	3.53 (31.25)	3.32 (29.41)
100mm (4")	N/A	5.57 (49.33)	5.16 (45.63)	4.79 (42.44)	4.48 (39.67)	4.21 (37.24)	3.96 (35.09)

EFT Cylinders

Maximum Moments N-m (in-lb)

Bore	Stroke Length				
	40mm	45mm	50mm	75mm	100mm
12mm (1/2")	N/A	N/A	N/A	N/A	N/A
16mm (5/8")	N/A	N/A	N/A	N/A	N/A
20mm (3/4")	0.20 (1.74)	0.18 (1.62)	0.17 (1.51)	N/A	N/A
25mm (1")	0.21 (1.89)	0.20 (1.76)	0.19 (1.64)	N/A	N/A
32mm (1-1/4")	0.25 (2.20)	0.23 (2.05)	0.22 (1.92)	0.16 (1.46)	0.13 (1.18)
40mm (1-1/2")	0.29 (2.59)	0.27 (2.41)	0.26 (2.26)	0.19 (1.72)	0.16 (1.39)
50mm (2")	0.69 (6.11)	0.65 (5.73)	0.61 (5.40)	0.47 (4.19)	0.39 (3.42)
63mm (2-1/2")	1.49 (13.15)	1.40 (12.39)	1.32 (11.71)	1.04 (9.19)	0.85 (7.57)
80mm (3-1/4")	3.14 (27.77)	2.97 (26.30)	2.82 (24.98)	2.26 (19.96)	1.88 (16.63)
100mm (4")	3.75 (33.17)	3.55 (31.45)	3.38 (29.90)	2.71 (24.00)	2.26 (20.04)

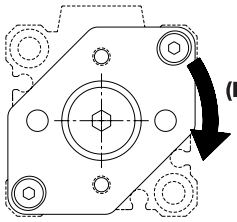

Bore	Stroke Length						
	5mm	10mm	15mm	20mm	25mm	30mm	35mm
12mm (1/2")	0.17 (.007)	0.21 (.008)	0.25 (.010)	0.29 (.012)	0.34 (.013)	0.38 (.015)	N/A
16mm (5/8")	0.18 (.007)	0.23 (.009)	0.27 (.011)	0.32 (.012)	0.36 (.014)	0.41 (.016)	N/A
20mm (3/4")	0.15 (.006)	0.18 (.007)	0.20 (.008)	0.23 (.009)	0.26 (.010)	0.29 (.011)	0.32 (.013)
25mm (1")	0.16 (.006)	0.19 (.007)	0.22 (.008)	0.24 (.010)	0.27 (.011)	0.30 (.012)	0.33 (.013)
32mm (1-1/4")	0.17 (.007)	0.20 (.008)	0.23 (.009)	0.26 (.010)	0.28 (.011)	0.31 (.012)	0.34 (.013)
40mm (1-1/2")	0.17 (.007)	0.20 (.008)	0.23 (.009)	0.26 (.010)	0.28 (.011)	0.31 (.012)	0.34 (.013)
50mm (2")	N/A	0.26 (.010)	0.30 (.012)	0.33 (.013)	0.36 (.014)	0.40 (.016)	0.43 (.017)
63mm (2-1/2")	N/A	0.18 (.007)	0.20 (.008)	0.22 (.009)	0.24 (.010)	0.26 (.010)	0.28 (.011)
80mm (3-1/4")	N/A	0.20 (.008)	0.23 (.009)	0.25 (.010)	0.27 (.011)	0.29 (.011)	0.31 (.012)
100mm (4")	N/A	0.21 (.008)	0.23 (.009)	0.26 (.010)	0.28 (.011)	0.30 (.012)	0.32 (.013)

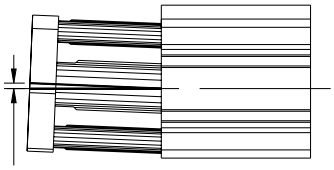

Bore	Stroke Length				
	40mm	45mm	50mm	75mm	100mm
12mm (1/2")	N/A	N/A	N/A	N/A	N/A
16mm (5/8")	N/A	N/A	N/A	N/A	N/A
20mm (3/4")	0.35 (.014)	0.38 (.015)	0.40 (.016)	N/A	N/A
25mm (1")	0.36 (.014)	0.39 (.015)	0.42 (.016)	N/A	N/A
32mm (1-1/4")	0.37 (.015)	0.40 (.016)	0.43 (.017)	0.57 (.022)	0.71 (.028)
40mm (1-1/2")	0.37 (.015)	0.40 (.016)	0.43 (.017)	0.57 (.022)	0.71 (.028)
50mm (2")	0.46 (.018)	0.50 (.020)	0.53 (.021)	0.70 (.027)	0.86 (.034)
63mm (2-1/2")	0.30 (.012)	0.32 (.013)	0.35 (.014)	0.45 (.018)	0.55 (.022)
80mm (3-1/4")	0.33 (.013)	0.36 (.014)	0.38 (.015)	0.49 (.019)	0.60 (.023)
100mm (4")	0.34 (.014)	0.36 (.014)	0.39 (.015)	0.50 (.020)	0.61 (.024)

EFT Cylinders with X Option

Maximum Side Loads kg-Force (lb)

Bore	Stroke Length						
	5mm	10mm	15mm	20mm	25mm	30mm	35mm
12mm (1/2")	N/A	2.99 (6.58)	2.85 (6.28)	2.76 (6.07)	2.69 (5.92)	2.63 (5.80)	N/A
16mm (5/8")	N/A	4.21 (9.27)	4.02 (8.84)	3.88 (8.54)	3.78 (8.32)	3.70 (8.15)	N/A
20mm (3/4")	N/A	8.13 (17.90)	7.84 (17.25)	7.63 (16.79)	7.47 (16.45)	7.35 (16.18)	7.26 (15.97)
25mm (1")	N/A	8.52 (18.76)	8.18 (18.01)	7.94 (17.47)	7.75 (17.06)	7.60 (16.74)	7.49 (16.48)
32mm (1-1/4")	N/A	8.75 (19.27)	8.42 (18.53)	8.16 (17.97)	7.96 (17.53)	7.80 (17.18)	7.68 (16.90)
40mm (1-1/2")	N/A	10.18 (22.40)	9.69 (21.34)	9.32 (20.52)	9.03 (19.87)	8.78 (19.33)	8.58 (18.89)
50mm (2")	N/A	15.11 (33.26)	14.49 (31.90)	14.01 (30.84)	13.63 (30.00)	13.31 (29.30)	13.05 (28.72)
63mm (2-1/2")	N/A	24.31 (53.50)	23.36 (51.41)	22.61 (49.76)	22.00 (48.42)	21.50 (47.32)	21.07 (46.38)
80mm (3-1/4")	N/A	38.19 (84.06)	36.78 (80.96)	35.64 (78.44)	34.68 (76.34)	33.76 (74.32)	33.19 (73.06)
100mm (4")	N/A	42.40 (93.34)	40.83 (89.88)	39.52 (86.98)	38.39 (84.51)	37.43 (82.38)	36.58 (80.53)

Bore	Stroke Length				
	40mm	45mm	50mm	75mm	100mm
12mm (1/2")	N/A	N/A	N/A	N/A	N/A
16mm (5/8")	N/A	N/A	N/A	N/A	N/A
20mm (3/4")	7.17 (15.79)	7.11 (15.65)	7.05 (15.52)	N/A	N/A
25mm (1")	7.39 (16.27)	7.31 (16.09)	7.24 (15.94)	N/A	N/A
32mm (1-1/4")	7.57 (16.66)	7.48 (16.46)	7.40 (16.29)	7.14 (15.71)	6.98 (15.36)
40mm (1-1/2")	8.41 (18.52)	8.27 (18.20)	8.14 (17.92)	7.70 (16.96)	7.44 (16.38)
50mm (2")	12.82 (28.23)	12.63 (27.81)	12.47 (27.44)	11.88 (26.16)	11.53 (25.39)
63mm (2-1/2")	20.71 (45.59)	20.40 (44.90)	20.13 (44.30)	19.16 (42.18)	18.57 (40.88)
80mm (3-1/4")	32.60 (71.75)	32.07 (70.60)	31.61 (69.59)	29.95 (65.92)	28.90 (63.61)
100mm (4")	35.84 (78.90)	35.19 (77.46)	34.61 (76.18)	32.43 (71.38)	31.01 (68.26)

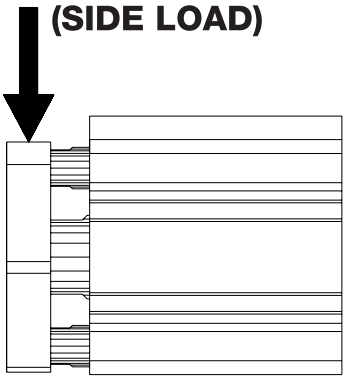

Maximum Moments N-m (in-lb)

Bore	Stroke Length						
	5mm	10mm	15mm	20mm	25mm	30mm	35mm
12mm (1/2")	N/A	0.15 (1.31)	0.14 (1.27)	0.14 (1.23)	0.13 (1.21)	0.13 (1.19)	N/A
16mm (5/8")	N/A	0.27 (2.42)	0.26 (2.32)	0.25 (2.26)	0.25 (2.21)	0.24 (2.18)	N/A
20mm (3/4")	N/A	0.68 (6.14)	0.66 (5.94)	0.64 (5.80)	0.63 (5.70)	0.62 (5.62)	0.62 (5.56)
25mm (1")	N/A	0.77 (6.93)	0.74 (6.70)	0.72 (6.53)	0.71 (6.40)	0.70 (6.30)	0.69 (6.22)
32mm (1-1/4")	N/A	0.89 (7.99)	0.86 (7.79)	0.85 (7.63)	0.83 (7.52)	0.82 (7.43)	0.82 (7.35)
40mm (1-1/2")	N/A	1.11 (10.02)	1.08 (9.71)	1.05 (9.48)	1.03 (9.29)	1.02 (9.15)	1.00 (9.03)
50mm (2")	N/A	2.16 (19.48)	2.10 (18.95)	2.06 (18.54)	2.02 (18.22)	1.99 (17.96)	1.97 (17.75)
63mm (2-1/2")	N/A	4.31 (38.84)	4.18 (37.70)	4.08 (36.80)	4.01 (36.09)	3.94 (35.51)	3.89 (35.02)
80mm (3-1/4")	N/A	8.44 (76.07)	8.21 (73.99)	8.03 (72.32)	7.88 (70.96)	7.75 (69.82)	7.64 (68.86)
100mm (4")	N/A	10.63 (95.78)	10.35 (93.25)	10.12 (91.16)	9.93 (89.42)	9.76 (87.94)	9.62 (86.67)

EFT Cylinders with X Option

Maximum Moments N-m (in-lb)

Bore	Stroke Length				
	40mm	45mm	50mm	75mm	100mm
12mm (1/2")	N/A	N/A	N/A	N/A	N/A
16mm (5/8")	N/A	N/A	N/A	N/A	N/A
20mm (3/4")	0.61 (5.50)	0.61 (5.46)	0.60 (5.42)	N/A	N/A
25mm (1")	0.68 (6.15)	0.68 (6.10)	0.67 (6.05)	N/A	N/A
32mm (1-1/4")	0.81 (7.29)	0.80 (7.24)	0.80 (7.20)	0.76 (6.84)	0.75 (6.77)
40mm (1-1/2")	0.99 (8.93)	0.98 (8.84)	0.97 (8.77)	0.90 (8.15)	0.89 (8.02)
50mm (2")	1.95 (17.57)	1.93 (17.42)	1.92 (17.28)	1.79 (16.16)	1.77 (15.91)
63mm (2-1/2")	3.84 (34.61)	3.80 (34.25)	3.77 (33.95)	3.47 (31.26)	3.40 (30.64)
80mm (3-1/4")	7.55 (68.03)	7.47 (67.32)	7.40 (66.69)	6.77 (60.95)	6.61 (59.55)
100mm (4")	9.50 (85.57)	9.39 (84.60)	9.30 (83.75)	8.95 (80.63)	8.73 (78.66)

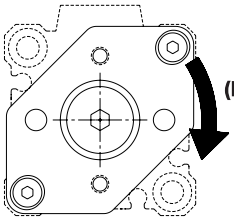

Tooling Plate End Play mm (in)

Bore	Stroke Length						
	5mm	10mm	15mm	20mm	25mm	30mm	35mm
12mm (1/2")	N/A	0.10 (.004)	0.08 (.003)	0.08 (.003)	0.05 (.002)	0.05 (.002)	N/A
16mm (5/8")	N/A	0.10 (.004)	0.08 (.003)	0.08 (.003)	0.08 (.003)	0.05 (.002)	N/A
20mm (3/4")	N/A	0.10 (.004)	0.08 (.003)	0.08 (.003)	0.05 (.002)	0.05 (.002)	0.05 (.002)
25mm (1")	N/A	0.08 (.003)	0.08 (.003)	0.08 (.003)	0.05 (.002)	0.05 (.002)	0.05 (.002)
32mm (1-1/4")	N/A	0.08 (.003)	0.08 (.003)	0.05 (.002)	0.05 (.002)	0.05 (.002)	0.05 (.002)
40mm (1-1/2")	N/A	0.08 (.003)	0.05 (.002)	0.05 (.002)	0.05 (.002)	0.05 (.002)	0.05 (.002)
50mm (2")	N/A	0.08 (.003)	0.08 (.003)	0.05 (.002)	0.05 (.002)	0.05 (.002)	0.05 (.002)
63mm (2-1/2")	N/A	0.05 (.002)	0.05 (.002)	0.05 (.002)	0.05 (.002)	0.05 (.002)	0.03 (.001)
80mm (3-1/4")	N/A	0.05 (.002)	0.05 (.002)	0.05 (.002)	0.05 (.002)	0.03 (.001)	0.03 (.001)
100mm (4")	N/A	0.05 (.002)	0.05 (.002)	0.03 (.001)	0.03 (.001)	0.03 (.001)	0.03 (.001)

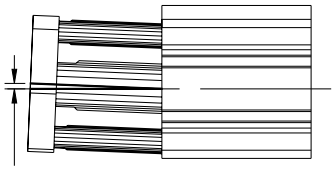

Bore	Stroke Length				
	40mm	45mm	50mm	75mm	100mm
12mm (1/2")	N/A	N/A	N/A	N/A	N/A
16mm (5/8")	N/A	N/A	N/A	N/A	N/A
20mm (3/4")	0.05 (.002)	0.05 (.002)	0.05 (.002)	N/A	N/A
25mm (1")	0.05 (.002)	0.05 (.002)	0.03 (.001)	N/A	N/A
32mm (1-1/4")	0.05 (.002)	0.05 (.002)	0.03 (.001)	0.03 (.001)	0.03 (.001)
40mm (1-1/2")	0.05 (.002)	0.03 (.001)	0.03 (.001)	0.03 (.001)	0.13 (.005)
50mm (2")	0.05 (.002)	0.05 (.002)	0.05 (.002)	0.03 (.001)	0.13 (.005)
63mm (2-1/2")	0.03 (.001)	0.03 (.001)	0.03 (.001)	0.03 (.001)	0.13 (.005)
80mm (3-1/4")	0.03 (.001)	0.03 (.001)	0.03 (.001)	0.03 (.001)	0.13 (.005)
100mm (4")	0.03 (.001)	0.03 (.001)	0.03 (.001)	0.03 (.001)	0.13 (.005)

Components

Shown in millimeters (inches)

Part List

Part #	Description	Material
1	Rod	4301 (303) Stainless Steel
2	Rod Seal/Wiper	Nitrile (Standard) or Fluoroelastomer (High Temperature Option)
3	Retaining Ring	Zinc Plated Carbon Steel or Stainless Steel (Optional)
4	Rod Guide	12-20mm: Bronze / 25-100mm: Anodized Aluminum
5	Bushing	12-20mm: Bronze / 25-100mm: Self Lubricating Nylon
6	Piston Seal	Nitrile (Standard) or Fluoroelastomer (High Temperature Option)
7	Cylinder Body	Polytetrafluoroethylene (PTFE) Impregnated Hard Anodized Aluminum
8	Rod Guide Seal	Nitrile (Standard) or Fluoroelastomer (High Temperature Option)
9	Piston	High Strength Aluminum Alloy
11	Cap Screw	Stainless Steel
12	Guide Rod	Chrome Plated Stainless Steel
13	Guide Bushing	Delrin
14	Flat Screw	Stainless Steel
15	Plate	Clear Coat Anodized Aluminum

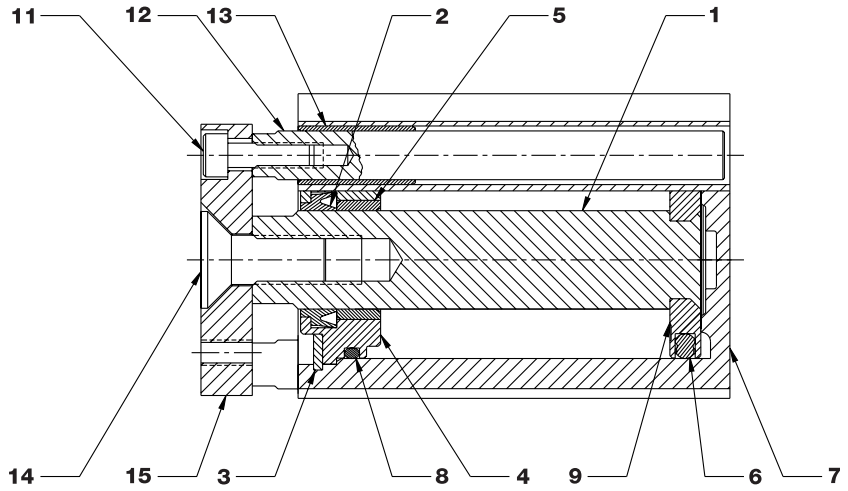

Tooling Plate Styles

12mm to 16mm Bore

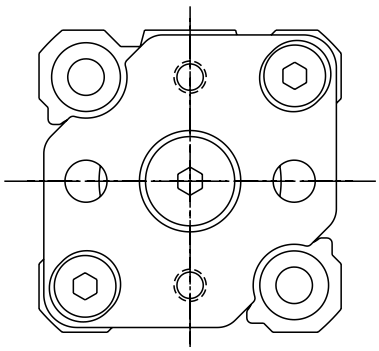

20mm to 100mm Bore

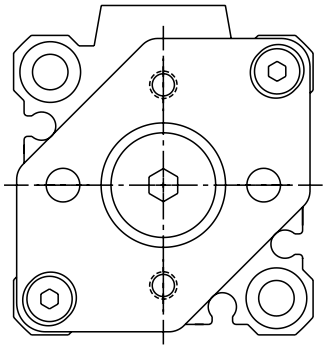

Dimensions

Shown in millimeters (inches)

EFT Cylinder **EFDT Cylinder** **X Option**

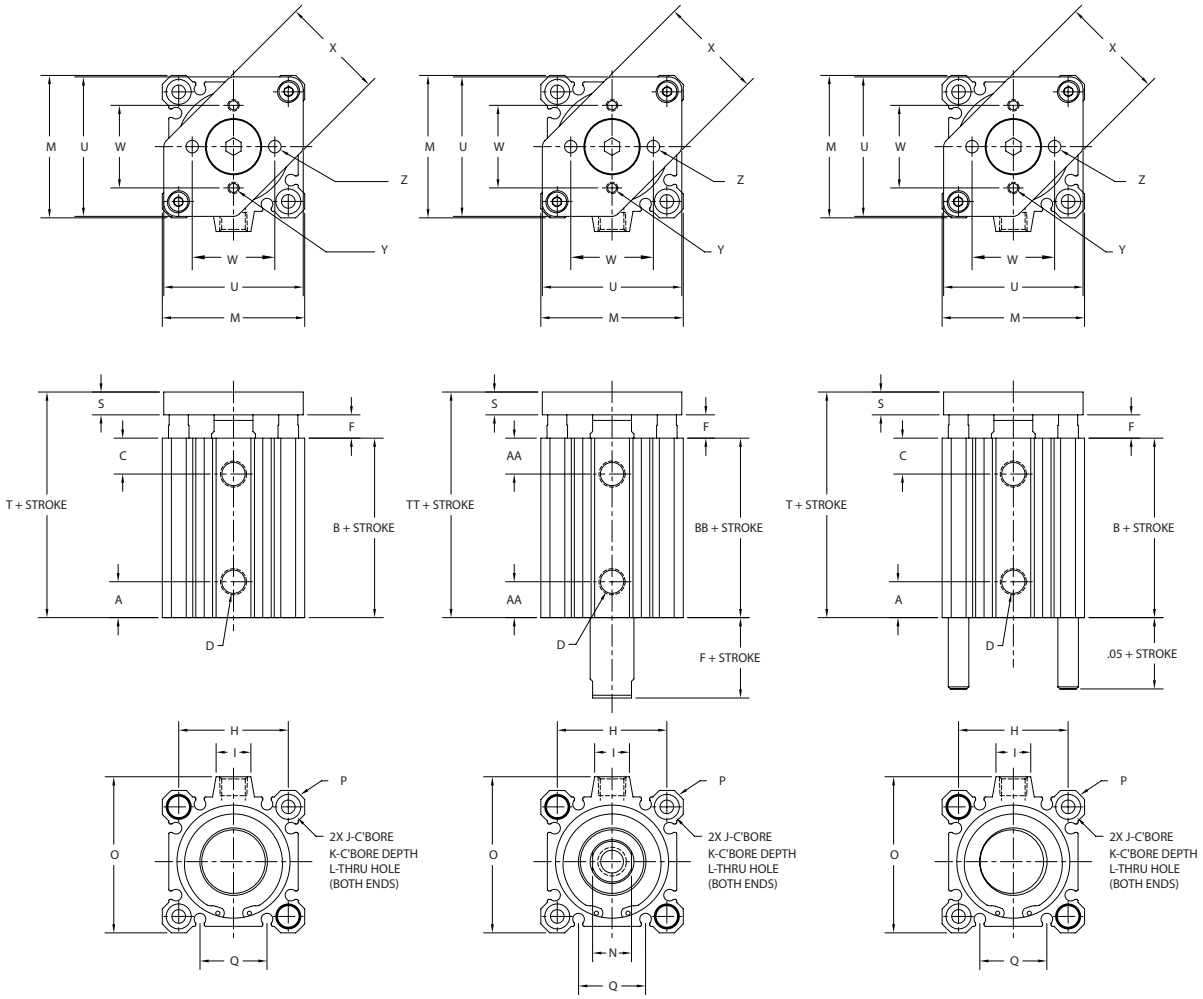

Double Acting/Non-Rotating

Bore	A	AA	B	BB	C	D	F	H	I	J
12mm (1/2")	3.8 (0.15)	10.6 (0.42)	17.0 (0.67)	25.2 (0.99)	8.9 (0.35)	M5 x 0.8 (#10-32)	3.5 (0.14)	15.5 (0.61)	N/A	6.1 (0.24)
16mm (5/8")	4.5 (0.18)	10.7 (0.42)	18.5 (0.73)	26.0 (1.03)	9.4 (0.37)	M5 x 0.8 (#10-32)	3.5 (0.14)	20.0 (0.79)	8.7 (0.34)	6.5 (0.26)
20mm (3/4")	4.8 (0.19)	10.1 (0.40)	19.5 (0.77)	26.0 (1.03)	9.4 (0.37)	M5 x 0.8 (#10-32)	4.5 (0.18)	25.5 (1.00)	9.5 (0.38)	9.0 (0.36)
25mm (1")	5.1 (0.20)	11.2 (0.44)	22.5 (0.89)	29.0 (1.14)	10.9 (0.43)	M5 x 0.8 (#10-32)	5.0 (0.20)	28.0 (1.10)	10.3 (0.41)	9.0 (0.36)
32mm (1-1/4")	7.0 (0.28)	8.9 (0.35)	23.0 (0.91)	30.5 (1.20)	10.4 (0.41)	G - 1/8 (NPT 1/8)	7.0 (0.28)	34.0 (1.34)	18.6 (0.73)	9.0 (0.36)
40mm (1-1/2")	7.4 (0.29)	13.1 (0.52)	29.5 (1.16)	40.0 (1.58)	13.2 (0.52)	G - 1/8 (NPT 1/8)	7.0 (0.28)	40.0 (1.58)	17.3 (0.68)	9.0 (0.36)
50mm (2")	9.4 (0.37)	12.2 (0.48)	30.5 (1.20)	40.5 (1.60)	13.7 (0.54)	G - 1/4 (NPT 1/4)	8.0 (0.32)	50.0 (1.97)	20.0 (0.79)	11.1 (0.44)
63mm (2-1/2")	9.7 (0.38)	12.8 (0.50)	36.0 (1.42)	42.0 (1.66)	15.7 (0.62)	G - 1/4 (NPT 1/4)	8.0 (0.32)	60.0 (2.36)	20.0 (0.79)	14.1 (0.56)
80mm (3-1/4")	11.6 (0.46)	14.4 (0.57)	43.5 (1.71)	51.0 (2.01)	17.8 (0.70)	G - 3/8 (NPT 3/8)	10.0 (0.39)	77.0 (3.03)	26.0 (1.02)	17.5 (0.69)
100mm (4")	12.2 (0.48)	18.3 (0.72)	53.0 (2.09)	60.5 (2.32)	24.4 (0.96)	G - 3/8 (NPT 3/8)	12.0 (0.47)	94.0 (3.70)	26.0 (1.02)	17.5 (0.69)

Dimensions

Shown in millimeters (inches)

Bore	K	L	M	N	O	P	Q	S
12mm (1/2")	3.5 (0.14)	3.5 (0.14)	25.0 (0.98)	5.0 (0.19)	25.0 (0.98)	32.0 (1.26)	5.3 (0.21)	6.0 (0.24)
16mm (5/8")	3.5 (0.14)	3.5 (0.14)	29.0 (1.14)	6.0 (0.25)	29.0 (1.14)	38.0 (1.50)	7.8 (0.31)	6.0 (0.24)
20mm (3/4")	7.0 (0.28)	5.5 (0.22)	36.0 (1.42)	8.0 (0.31)	36.0 (1.42)	47.0 (1.85)	10.5 (0.41)	6.9 (0.27)
25mm (1")	7.0 (0.28)	5.5 (0.22)	40.0 (1.58)	10.0 (0.38)	40.0 (1.58)	52.0 (2.05)	11.5 (0.45)	8.3 (0.33)
32mm (1-1/4")	7.0 (0.28)	5.5 (0.22)	45.0 (1.77)	14.0 (0.56)	49.5 (1.95)	60.0 (2.36)	17.7 (0.70)	8.3 (0.33)
40mm (1-1/2")	7.0 (0.28)	5.5 (0.22)	52.0 (2.05)	14.0 (0.56)	57.0 (2.24)	69.0 (2.72)	24.5 (0.96)	8.3 (0.33)
50mm (2")	8.0 (0.31)	6.9 (0.27)	64.0 (2.52)	17.0 (0.69)	71.0 (2.80)	86.0 (3.39)	29.3 (1.16)	12.1 (0.48)
63mm (2-1/2")	10.5 (0.41)	8.8 (0.35)	77.0 (3.03)	17.0 (0.69)	84.0 (3.31)	103.0 (4.06)	29.1 (1.15)	12.5 (0.49)
80mm (3-1/4")	13.5 (0.53)	11.0 (0.43)	98.0 (3.86)	22.0 (0.88)	104.0 (4.09)	132.0 (5.20)	28.1 (1.11)	14.0 (0.55)
100mm (4")	13.5 (0.53)	11.0 (0.43)	117.0 (4.61)	27.0 (1.06)	123.5 (4.86)	156.0 (6.14)	32.3 (1.27)	14.0 (0.55)

Bore	T	TT	U	W	X	Y		Z	
						Standard	With Option E	Standard	With Option E
12mm (1/2")	26.5 (1.04)	34.7 (1.37)	24.3 (0.96)	14.0 (0.55)	20.8 (0.82)	M3 x 0.5 6H	#4-40 UNC-2B	4.1 (0.16)	3.6 (0.14)
16mm (5/8")	28.0 (1.10)	35.5 (1.40)	28.0 (1.10)	20.0 (0.79)	25.0 (0.98)	M3 x 0.5 6H	#4-40 UNC-2B	4.1 (0.16)	3.6 (0.14)
20mm (3/4")	30.8 (1.21)	37.4 (1.47)	35.0 (1.38)	27.0 (1.06)	26.5 (1.04)	M4 x 0.7 6H	#6-32 UNC-2B	5.2 (0.20)	4.3 (0.17)
25mm (1")	35.8 (1.41)	42.3 (1.67)	39.0 (1.54)	27.0 (1.06)	30.0 (1.18)	M4 x 0.7 6H	#6-32 UNC-2B	5.2 (0.20)	4.3 (0.17)
32mm (1-1/4")	38.3 (1.52)	45.8 (1.80)	44.0 (1.73)	30.0 (1.18)	34.3 (1.35)	M4 x 0.7 6H	#8-32 UNC-2B	5.2 (0.20)	4.7 (0.18)
40mm (1-1/2")	44.8 (1.76)	55.3 (2.18)	51.0 (2.01)	30.0 (1.18)	38.0 (1.50)	M4 x 0.7 6H	#8-32 UNC-2B	5.2 (0.20)	4.7 (0.18)
50mm (2")	50.6 (1.99)	60.6 (2.39)	63.0 (2.48)	42.8 (1.69)	48.0 (1.89)	M5 x 0.8 6H	#10-32 UNF-2B	6.4 (0.25)	5.6 (0.22)
63mm (2-1/2")	56.5 (2.22)	62.5 (2.46)	75.8 (2.98)	42.8 (1.69)	53.7 (2.11)	M5 x 0.8 6H	#10-32 UNF-2B	6.4 (0.25)	5.6 (0.22)
80mm (3-1/4")	67.5 (2.66)	75.0 (2.95)	97.0 (3.82)	50.8 (2.00)	74.8 (2.94)	M6 x 1.0 6H	#1/4-20 UNC-2B	7.1 (0.28)	7.2 (0.29)
100mm (4")	79.0 (3.11)	86.5 (3.41)	115.5 (4.55)	50.8 (2.00)	93.3 (3.67)	M6 x 1.0 6H	#1/4-20 UNC-2B	7.1 (0.28)	7.2 (0.29)

**See page 2.67 for overall body length with MRS option.*

When option E is specified, user interface threads are designated U.S. customary (inch). This includes ports, rod threads and threaded mounting options (as applicable).

Weights

Bore		Approximate Base Weight of Cylinder gram-force (oz.)		Weight Adder per 5mm of Stroke gram-force (oz.)	
12mm	(1/2")	32.3	(1.14)	6.1	(0.22)
16mm	(5/8")	53.4	(1.89)	8.6	(0.30)
20mm	(3/4")	74.4	(2.62)	13.3	(0.47)
25mm	(1")	114.6	(4.04)	16.3	(0.58)
32mm	(1-1/4")	166.9	(5.89)	22.6	(0.80)
40mm	(1-1/2")	250.7	(8.84)	23.0	(0.81)
50mm	(2")	440.4	(15.53)	35.8	(1.26)
63mm	(2-1/2")	697.3	(24.60)	45.2	(1.59)
80mm	(3-1/4")	1309.6	(46.20)	70.0	(2.47)
100mm	(4")	2464.6	(86.94)	117.5	(4.15)

Options

Magnetic Position Sensing (M)

(Overall Length Adders)

Model Type and Size	Body Length	Total Length
EFT	B*	T*
12mm – 100mm	10.0 (0.39)	10.0 (0.39)
EFDT	BB*	TT*
12mm	7.2 (0.28)	7.2 (0.28)
16mm – 100mm	10.0 (0.39)	10.0 (0.39)

*Add the following lengths to the overall length dimension for EFT and EFDT cylinders when specifying a magnet option.

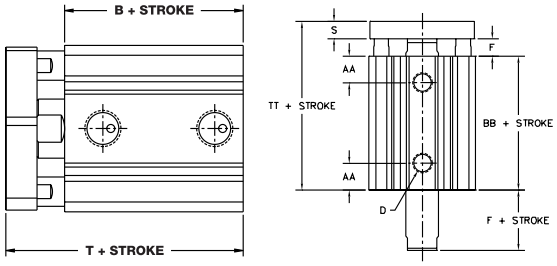

Bumpers (B)

(Stroke reduction by model for all bores)

Model	Stroke Reduction mm (inches)
Double Acting, Non-Rotating	3.0 (.12)

Bimba EFP MultiPosition Cylinder

The Bimba EFP Extruded Flat MultiPosition cylinder is a double-acting, single rod end cylinder that provides three positions in one cylinder package. This cylinder is a two piston design that saves space using the existing EF footprint and eliminates the need for an additional cylinder. This unit can help simplify machine changeovers and there-by saving costs.

Features and Advantages

- Provides three position output on extension using the same EF bore footprint to save space
- Easily interchangeable to other compact extruded cylinders of the same bore size
- Available in 10 bore sizes from 12mm to 100mm for greater application versatility
- Versatile to easily connect and operate your application's pneumatic logic
- Shares the same popular standard features as EF product line
    - PTFE impregnated, hard anodized aluminum body for superior wear resistance
    - 4301 (303) Stainless Steel Rod
    - High Strength Aluminum Alloy Piston with Nitrile Piston Seal
    - Bronze Bushing (12-20mm); Self-Lubricating Nylon Bushing (25-100mm)
    - Bronze Rod Guide (12-20mm); Anodized Aluminum (25-100mm)
    - Nitrile Rod Seal and Wiper
    - Zinc Plated Carbon Steel Retaining Ring
    - Repairable and easy to maintain
- Standard with threaded front/rear mounting holes, English customary units, and magnetic positioning sensing (MRS) at no extra charge as compared to the competition.
- Standard options include bumpers, full flow ports, rod threads, rod extensions, and high temperature seals.
- All units are made to order and available to ship in three days!
- CAD drawings (2D and 3D) can be downloaded from our web site at: www.bimba.com/cad/

How It Works

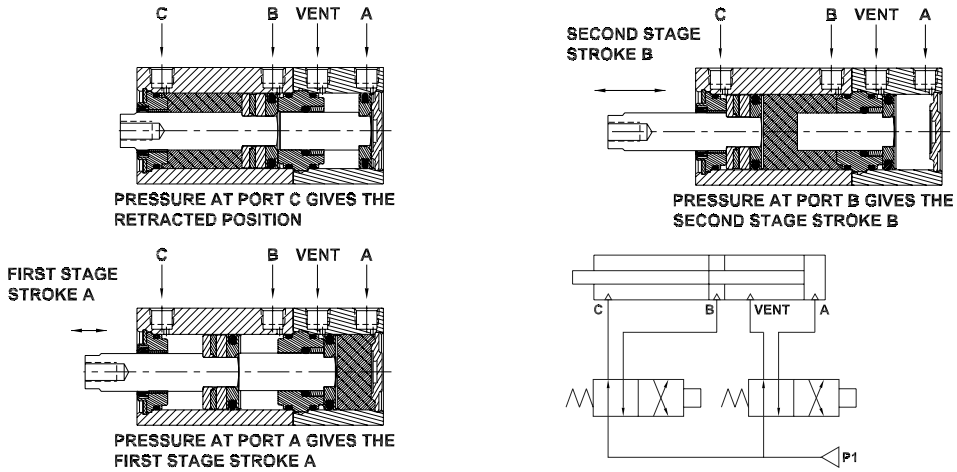

How to Order

The model number for all EFP MultiPosition Cylinders consists of three alphanumeric clusters. These three parts designate the type of cylinder, the cylinder bore size and stroke length A/B, and cylinder options. For example, an EFP-2550/25-3EMV is a 25mm bore EF MultiPosition cylinder with 50mm for stroke plus an additional 25mm for stroke B. Additional features are threaded front/rear mounting, English ports/rod threads, magnetic position sensing, and high temperature seals. Please refer to the chart below for part number explanation and options.

Please note that all models come STANDARD with threaded front/rear mounting holes (3), English customary units for interface threads (E), and magnetic positioning sensing (M) options.

TYPE	BORE SIZE mm (inch)*	STROKE LENGTH A	STROKE LENGTH B
EFP - Double Acting, Single End Rod	12mm - (1/2") 16mm - (5/8") 20mm - (3/4") 25mm - (1") 32mm - (1-1/4") 40mm - (1-1/2") 50mm - (2") 63mm - (2-1/2") 80mm - (3-1/4") 100mm - (4")	See table - page 2.70 for Stroke A	See table - page 2.70 for Stroke B

EFP-2550/25-3EMV

MOUNTING OPTIONS
3 - Threaded front/rear mounting option - **standard** (page 2.77)

OPTIONS

(Enter in alphabetical order, except EE which is last)

- B – Bumpers (see page 2.77)[1]
- C – Stainless steel retaining ring
- E – U.S. customary units (inch)[2] - **standard**
- F – Full-flow port orifice[5]
- M – Magnetic position sensing (see page 2.56)[3] - **standard**
- MT – Male rod end (fine thread) (see page 2.77)[4]
- NT – Non-threaded rod
- V – High temperature option -10° to 110°C (15°F to 225°F)
- EE – Extra Rod Extensions in 1mm increments

[1]Bumpers reduce stroke length by 3mm. When bumper is specified with option V, standard bumper material is supplied. Operating temperature remains -10° to 70°C (15° to 160°F).

[2]When option E is specified, user interface threads are designated U.S. customary (inch). This includes ports, rod threads and threaded mounting options (as applicable).

[3]When magnetic position sensing is specified with option V, operating temperature remains -10° to 70°C (15° to 160°F). This combination is recommended when fluoroelastomer is specified for compatibility.

[4]MT option must be specified to use rod pivot.

[5]Automatically includes bumpers, so stroke is reduced by 3mm.

Please note that throughout all catalog charts, metric measurements are shown first and U.S. customary units (inches) are in parentheses.
*NOTE: Number in parentheses are the equivalent bore size in inches and listed FOR REFERENCE ONLY. DO NOT use for model designation.

Stroke Length Availability

The table to right represents our standard stroke lengths for each stage. Please note that the total combined strokes (A + B) may not be greater than the maximum stroke as listed in the table.

Bimba is a JIT manufacturer and we are able to provide EFP cylinders in ANY stage to 1mm stroke length increment for all option styles within our standard three (3) day lead time. Longer stroke lengths, other options are available upon request. Please consult Technical Assistance at 800-44-BIMBA for help.

Nominal Bore Diameter	Double Acting EF Single Rod End		
	Standard Single Stage Stroke A or B (mm)	Minimum Single Stage Stroke A or B (mm)	Maximum Total Combining Stroke A + B (mm)
12mm (1/2")	5, 10, 15, 20, 25, 30	5	40
16mm (5/8")	5, 10, 15, 20, 25, 30	5	70
20mm (3/4")	5, 10, 15, 20, 25, 30, 35, 40, 45, 50	5	80
25mm (1")	5, 10, 15, 20, 25, 30, 35, 40, 45, 50	5	90
32mm (1-1/4")	5, 10, 15, 20, 25, 30, 35, 40, 45, 50, 75, 100	5	100
40mm (1-1/2")	5, 10, 15, 20, 25, 30, 35, 40, 45, 50, 75, 100	5	120
50mm (2")	10, 15, 20, 25, 30, 35, 40, 45, 50, 75, 100	10	120
63mm (2-1/2")	10, 15, 20, 25, 30, 35, 40, 45, 50, 75, 100	10	240
80mm (3-1/4")	10, 15, 20, 25, 30, 35, 40, 45, 50, 75, 100	10	230
100mm (4")	10, 15, 20, 25, 30, 35, 40, 45, 50, 75, 100	10	220

List Prices

Model Type	Bore Size									
	12	16	20	25	32	40	50	63	80	100
EFP List - 3EM	$ 76.15	$ 81.00	$ 91.30	$ 98.85	$120.10	$142.95	$171.05	$202.80	$256.50	$386.00
Total combined stroke per 5mm length* (2 X "A" stroke + "B" Stroke)	1.80	1.80	1.85	1.90	1.90	2.00	2.25	2.45	2.80	3.40
B	3.70	6.55	6.55	6.55	7.75	7.75	8.80	10.60	16.10	18.50
C	3.05	3.25	4.40	4.90	5.95	8.90	15.15	18.15	89.50	145.35
F (includes B option)	13.60	17.55	17.55	19.75	21.45	21.45	24.95	27.65	35.30	39.50
MT	1.70	1.70	1.70	2.60	2.60	2.95	3.45	3.95	7.85	11.75
V	12.25	13.40	13.85	16.70	18.65	26.60	29.20	38.00	46.50	58.65
EE per 1mm length	0.40	0.40	0.40	0.45	0.45	0.45	0.50	0.50	0.55	0.55

* The stroke adder for EFP cylinders is equal to 2 times the stroke length of A plus the stroke length of B. For example, an EFP-2550/25-3EMV would have a total combined stroke length of 125mm. All total combined stroke lengths are rounded to the nearest 5mm.

No additional charge for NT options
Standard options are 3, E, and M

Cylinder Weights

Bore Size	Approximate Base Weight of Cylinder		Approximate Weight added per 5mm of stroke	
	gf	oz	gf	oz
12mm (1/2")	56.7	2.00	5.6	0.20
16mm (5/8")	100.6	3.54	8.0	0.28
20mm (3/4")	120.6	4.26	11.5	0.41
25mm (1")	190.1	6.71	14.6	0.52
32mm (1-1/4")	294.6	10.40	20.9	0.74
40mm (1-1/2")	471.6	16.64	21.3	0.75
50mm (2")	764.4	26.96	33.6	1.19
63mm (2-1/2")	1259.7	44.43	40.7	1.44
80mm (3-1/4")	2301.5	81.20	62.6	2.21
100mm (4")	4903.3	172.95	110.1	3.89

Bimba EFQ MultiForce Cylinder

The Bimba EFQ Extruded Flat MultiForce cylinder is a double-acting, single end rod cylinder that DOUBLES the resultant force on extension. This cylinder is a two piston design that saves space using the existing EF footprint and eliminates the need for higher pressure systems or unique configurations. Only one piston is pressurized on the return stroke to save air volume and operating costs.

Features and Advantages

- Doubles the force output on extension using the same EF bore footprint to save space
- Easily interchangeable to other compact extruded cylinders of the same bore size
- Available in 10 bore sizes from 12mm to 100mm for greater application versatility
- Versatile to easily connect and operate your application's pneumatic logic
- Shares the same popular standard features as EF product line
    - PTFE impregnated, hard anodized aluminum body for superior wear resistance
    - 4301 (303) Stainless Steel Rod
    - High Strength Aluminum Alloy Piston with Nitrile Piston Seal
    - Bronze Bushing (12-20mm); Self-Lubricating Nylon Bushing (25-100mm)
    - Bronze Rod Guide (12-20mm); Anodized Aluminum (25-100mm)
    - Nitrile Rod Seal and Wiper
    - Zinc Plated Carbon Steel Retaining Ring
    - Repairable and easy to maintain
- Standard with threaded front/rear mounting holes, English customary units, and magnetic positioning sensing (MRS) at no extra charge as compared to the competition.
- Standard options include bumpers, full flow ports, rod threads, rod extensions, and high temperature seals.
- All units are made to order and available to ship in three days!
- CAD drawings (2D and 3D) can be downloaded from our web site at: www.bimba.com/cad/

How It Works

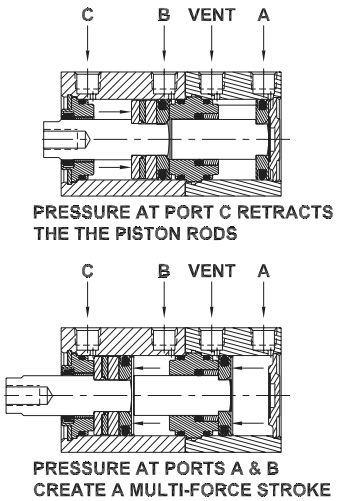

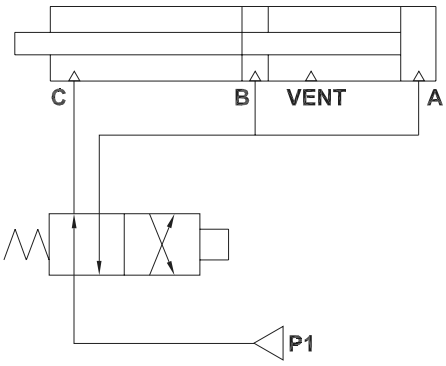

How to Order

The model number for all EFQ MultiForce Cylinders consists of three alphanumeric clusters. These three parts designate the type of cylinder, the cylinder bore size and stroke length, and cylinder options. Please refer to the chart below for part number explanation and options.

Please note that all models come STANDARD with threaded front/rear mounting holes (3), English customary units for interface threads (E), and magnetic positioning sensing (M) options.

TYPE
EFQ - Double Acting, Single End Rod

BORE SIZE mm (inch)*	
12mm - (1/2")	40mm - (1-1/2")
16mm - (5/8")	50mm - (2")
20mm - (3/4")	63mm - (2-1/2")
25mm - (1")	80mm - (3-1/4")
32mm - (1-1/4")	100mm - (4")

STROKE LENGTH **
See table - page 2.73

EFQ-2510-3EMMTV

MOUNTING OPTIONS
3 - Threaded front/rear mounting option - **standard** (page 2.77)

OPTIONS

(Enter in alphabetical order, except EE which is last)

- B – Bumpers (see page 2.77)[1]
- C – Stainless steel retaining ring
- E – U.S. customary units (inch)[2] - **standard**
- F – Full-flow port orifice[5]
- M – Magnetic position sensing (see page 2.56)[3] - **standard**
- MT – Male rod end (fine thread) (see page 2.77)[4]
- NT – Non-threaded rod
- V – High temperature option -10° to 110°C (15°F to 225°F)
- EE – Extra Rod Extensions in 1mm increments

[1]Bumpers reduce stroke length by 3mm. When bumper is specified with option V, standard bumper material is supplied. Operating temperature remains -10° to 70°C (15° to 160°F).

[2]When option E is specified, user interface threads are designated U.S. customary (inch). This includes ports, rod threads and threaded mounting options (as applicable).

[3]When magnetic position sensing is specified with option V, operating temperature remains -10° to 70°C (15° to 160°F). This combination is recommended when fluoroelastomer is specified for compatibility.

[4]MT option must be specified to use rod pivot.

[5]Automatically includes bumpers, so stroke is reduced by 3mm.

Please note that throughout all catalog charts, metric measurements are shown first and U.S. customary units (inches) are in parentheses.
*NOTE: Number in parentheses are the equivalent bore size in inches and listed FOR REFERENCE ONLY. DO NOT use for model designation.

Stroke Length Availability

The table to right represents our standard stroke lengths. Please note that the combination of stroke and extra rod extension may not be greater than the maximum stroke length as listed in the table.

Bimba is a JIT manufacturer and we are able to provide EFQ cylinders in ANY 1mm stroke length increment for all option styles within our standard three (3) day lead time. Longer stroke lengths other options are available upon request. Please consult Technical Assistance at 800-44-BIMBA for help.

Nominal Bore Diameter	Double Acting EFQ Single Rod End		
	Standard Single Length (mm)	Minimum Stroke Length (mm)	Maximum Stroke Length (mm)
12mm (1/2")	5, 10, 15, 20, 25, 30	5	40
16mm (5/8")	5, 10, 15, 20, 25, 30	5	70
20mm (3/4")	5, 10, 15, 20, 25, 30, 35, 40, 45, 50	5	90
25mm (1")	5, 10, 15, 20, 25, 30, 35, 40, 45, 50	5	100
32mm (1-1/4")	5, 10, 15, 20, 25, 30, 35, 40, 45, 50, 75, 100	5	160
40mm (1-1/2")	5, 10, 15, 20, 25, 30, 35, 40, 45, 50, 75, 100	5	120
50mm (2")	10, 15, 20, 25, 30, 35, 40, 45, 50, 75, 100	10	150
63mm (2-1/2")	10, 15, 20, 25, 30, 35, 40, 45, 50, 75, 100	10	110
80mm (3-1/4")	10, 15, 20, 25, 30, 35, 40, 45, 50, 75, 100	10	140
100mm (4")	10, 15, 20, 25, 30, 35, 40, 45, 50, 75, 100	10	160

List Prices

Model Type	Bore Size									
	12	16	20	25	32	40	50	63	80	100
EFQ List - 3EM	$ 72.60	$ 77.15	$ 86.85	$ 94.05	$114.30	$136.05	$162.85	$193.05	$244.20	$367.60
Stroke Adder per 5mm	2.70	2.70	2.85	3.00	3.00	3.10	3.65	4.35	5.05	6.10
B	3.70	6.55	6.55	6.55	7.75	7.75	8.80	10.60	16.10	18.50
C	3.05	3.25	4.40	4.90	5.95	8.90	15.15	18.15	89.50	145.35
F (includes B option)	13.60	17.55	17.55	19.75	21.45	21.45	24.95	27.65	35.30	39.50
MT	1.70	1.70	1.70	2.60	2.60	2.95	3.45	3.95	7.85	11.75
V	12.25	13.40	13.85	16.70	18.65	26.60	29.20	38.00	46.50	58.65
EE per 1mm length	0.40	0.40	0.40	0.45	0.45	0.45	0.50	0.50	0.55	0.55

No additional charge for NT options
Standard options are 3, E, and M

Cylinder Weights

Bore Size	Approximate Base Weight of Cylinder		Approximate Weight added per 5mm of stroke	
	gf	oz	gf	oz
12mm (1/2")	56.7	2.00	5.6	0.20
16mm (5/8")	100.6	3.54	8.0	0.28
20mm (3/4")	120.6	4.26	11.5	0.41
25mm (1")	190.1	6.71	14.6	0.52
32mm (1-1/4")	294.6	10.40	20.9	0.74
40mm (1-1/2")	471.6	16.64	21.3	0.75
50mm (2")	764.4	26.96	33.6	1.19
63mm (2-1/2")	1259.7	44.43	40.7	1.44
80mm (3-1/4")	2301.5	81.20	62.6	2.21
100mm (4")	4903.3	172.95	110.1	3.89

Engineering Specifications

Operating Medium:	Air
Maximum Operating Pressure:	10.0 bar (140 psi)
Ambient and Fluid Temperature:	-10° to 70°C (15° to 160°F)
Lubrication:	PTFE impregnated grease
Standard Rod End:	Female
Stroke Tolerance:	12-50mm bore: ± .6mm (.025 inch) 63-100mm bore: ± .8mm (.030 inch)
Cylinder Mounting (Standard):	Through hole with counterbores both ends Front and Rear threaded
Maximum Sideload:	Refer to page 2.47 of FL catalog for specific bore size and stroke length
Expected Service Life:	2500 kilometers (1500 miles)*

*For filtered, lubricated air, no-load conditions; if unlubricated, life is approximately 1/3.

Theoretical Cylindrical Forces

To determine the estimated force generated by the EFQ cylinder on extend or retract, use the appropriate power factor below and multiply it to the input working pressure to cylinder. Forces generated by EFP cylinders are found on page 2.48 of FL catalog.

Force (kg or lb) = Power Factor X Pressure (bar or psi)

Bore	Direction	Power Factor (kg/bar)	Power Factor (lb/psi)
12mm (1/2")	Extend	1.9	0.30
	Retract	0.8	0.10
16mm (5/8")	Extend	3.5	0.55
	Retract	1.5	0.20
20mm (3/4")	Extend	5.5	0.86
	Retract	2.4	0.40
25mm (1")	Extend	8.4	1.33
	Retract	3.8	0.60
32mm (1-1/4")	Extend	13.8	2.19
	Retract	6.0	0.90
40mm (1-1/2")	Extend	22.7	3.59
	Retract	10.6	1.60
50mm (2")	Extend	35.7	5.65
	Retract	16.5	2.60
63mm (2-1/2")	Extend	58.3	9.22
	Retract	28.0	4.30
80mm (3-1/4")	Extend	93.6	14.80
	Retract	45.4	7.0
100mm (4")	Extend	149.0	23.56
	Retract	71.5	11.1

Engineering Specifications

Components

#	Description	Material
1	Rod	4301 (303) Stainless Steel
2	Rod Seal/Wiper	Nitrile (Standard) or Fluoroelastomer (High Temperature option)
3	Retaining Ring	Zinc Plated Carbon Steel (standard) or Stainless Steel (optional)
4	Rod Guide	12-20mm bore – Bronze 25-100mm bore – Anodized Aluminum
5	Bushing	12-20mm bore – Bronze 25-100mm bore – Self Lubricating Nylon
6	Piston Seal	Nitrile (standard) or Fluoroelastomer (High Temperature option)
7	Cylinder Body	Polytetrafluoroethylene (PFTE) Impregnated Hard Anodized Aluminum
8	Rod Guide Seal	Nitrile (standard) or Fluoroelastomer (High Temperature option)
9	Piston	High Strength Aluminum Alloy
10	Center Section	12-20mm bore – Bronze 25-100mm bores – High Strength Aluminum Alloy
11	Front Magnet Plate	High Strength Aluminum Alloy
12	Magnet	Ferrite Nylon
13	Rear Magnet Plate	High Strength Aluminum Alloy
14	Threaded Insert	High Strength Steel
15	Tie Rod	High Strength Steel
16	Tie Nut	High Strength Steel

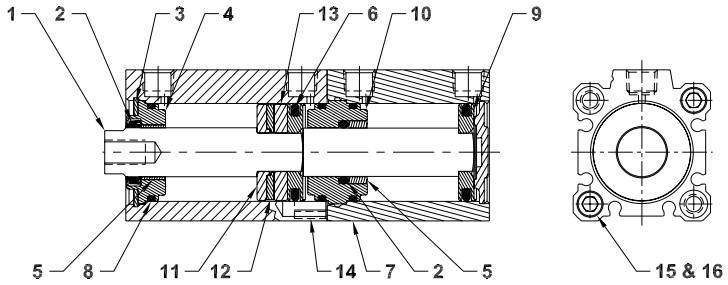

Body Styles

12mm Bore

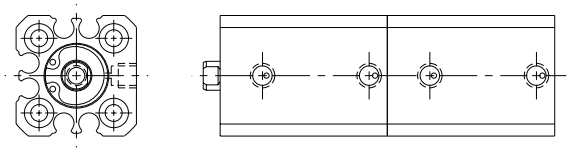

16mm to 32mm Bore

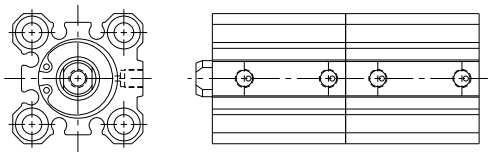

40mm to 100mm Bore

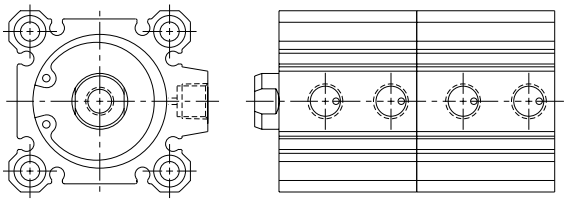

Dimensions

Shown in millimeters (inches)

Double Acting/Single Rod

Bore	A	B	C	D	E	F	H	I
12mm (1/2")	3.8 (0.15)	43.7 (1.72)	8.9 (0.35)	(#10-32)	6.0 (0.24)	3.5 (0.14)	15.5 (0.61)	N/A
16mm (5/8")	4.6 (0.18)	47.0 (1.85)	9.4 (0.37)	(#10-32)	8.0 (0.31)	3.5 (0.14)	20.0 (0.79)	8.7 (0.34)
20mm (3/4")	4.8 (0.19)	51.1 (2.01)	9.4 (0.37)	(#10-32)	10.0 (0.39)	4.5 (0.18)	25.5 (1.00)	9.5 (0.37)
25mm (1")	5.1 (0.20)	56.4 (2.22)	10.9 (0.43)	(#10-32)	12.0 (0.47)	5.0 (0.20)	28.0 (1.10)	10.3 (0.41)
32mm (1-1/4")	7.1 (0.28)	57.7 (2.27)	10.4 (0.41)	(NPT 1/8)	16.0 (0.63)	7.0 (0.28)	34.0 (1.34)	18.5 (0.73)
40mm (1-1/2")	7.4 (0.29)	71.6 (2.82)	13.2 (0.52)	(NPT 1/8)	16.0 (0.63)	7.0 (0.28)	40.0 (1.57)	17.3 (0.68)
50mm (2")	9.4 (0.37)	74.4 (2.93)	13.7 (0.54)	(NPT 1/4)	20.0 (0.79)	8.0 (0.31)	50.0 (1.97)	20.0 (0.79)
63mm (2-1/2")	9.7 (0.38)	84.2 (3.31)	15.7 (0.62)	(NPT 1/4)	20.0 (0.79)	8.0 (0.31)	60.0 (2.36)	20.0 (0.79)
80mm (3-1/4")	11.7 (0.46)	100.6 (3.96)	17.8 (0.70)	(NPT 3/8)	25.0 (0.98)	10.0 (0.39)	77.0 (3.03)	26.0 (1.02)
100mm (4")	12.2 (0.48)	121.4 (4.78)	24.4 (0.96)	(NPT 3/8)	30.0 (1.18)	12.0 (0.47)	94.0 (3.70)	26.0 (1.02)

Bore	J	K	L	M	N	O	P	Q
12mm (1/2")	6.1 (0.24)	3.5 (0.14)	3.5 (0.14)	25.0 (0.98)	5.0 (0.19)	25.0 (0.98)	32.0 (1.26)	5.3 (0.21)
16mm (5/8")	6.5 (0.26)	3.5 (0.14)	3.5 (0.14)	29.0 (1.14)	6.0 (0.25)	29.0 (1.14)	38.0 (1.50)	7.8 (0.31)
20mm (3/4")	9.0 (0.35)	7.0 (0.28)	5.5 (0.22)	36.0 (1.42)	8.0 (0.31)	36.0 (1.42)	47.0 (1.85)	10.5 (0.41)
25mm (1")	9.0 (0.35)	7.0 (0.28)	5.5 (0.22)	40.0 (1.57)	10.0 (0.38)	40.0 (1.57)	52.0 (2.05)	11.5 (0.45)
32mm (1-1/4")	9.0 (0.35)	7.0 (0.28)	5.5 (0.22)	45.0 (1.77)	14.0 (0.56)	49.5 (1.95)	60.0 (2.36)	17.7 (0.70)
40mm (1-1/2")	9.0 (0.35)	7.0 (0.28)	5.5 (0.22)	52.0 (2.05)	14.0 (0.56)	57.0 (2.24)	69.0 (2.72)	24.5 (0.96)
50mm (2")	11.1 (0.44)	8.0 (0.31)	6.9 (0.27)	64.0 (2.52)	17.0 (0.69)	71.0 (2.80)	86.0 (3.39)	29.3 (1.16)
63mm (2-1/2")	14.1 (0.56)	10.5 (0.41)	8.8 (0.35)	77.0 (3.03)	17.0 (0.69)	84.0 (3.31)	103.0 (4.06)	29.1 (1.15)
80mm (3-1/4")	17.5 (0.69)	13.5 (0.53)	11.0 (0.43)	98.0 (3.86)	22.0 (0.88)	104.0 (4.09)	132.0 (5.20)	28.1 (1.11)
100mm (4")	17.5 (0.69)	13.5 (0.53)	11.0 (0.43)	117.0 (4.61)	27.0 (1.06)	123.5 (4.86)	156.0 (6.14)	32.3 (1.27)

Bore	R	S	T
12mm (1/2")	(#8-32 UNC-2B)	8.1 (0.32)	20.8 (0.82)
16mm (5/8")	(#8-32 UNC-2B)	9.1 (0.36)	23.1 (0.91)
20mm (3/4")	(#10-32 UNF-2B)	10.2 (0.40)	26.4 (1.04)
25mm (1")	(1/4-28 UNF-2B)	11.7 (0.46)	29.2 (1.15)
32mm (1-1/4")	(5/16-24 UNF-2B)	12.7 (0.50)	31.5 (1.24)
40mm (1-1/2")	(3/8-24 UNF-2B)	16.3 (0.64)	40.3 (1.59)
50mm (2")	(1/2-20 UNF-2B)	16.8 (0.66)	41.9 (1.65)
63mm (2-1/2")	(1/2-20 UNF-2B)	20.3 (0.80)	47.2 (1.86)
80mm (3-1/4")	(5/8-18 UNF-2B)	25.7 (1.01)	57.5 (2.26)
100mm (4")	(3/4-16 UNF-2B)	28.7 (1.13)	69.7 (2.74)

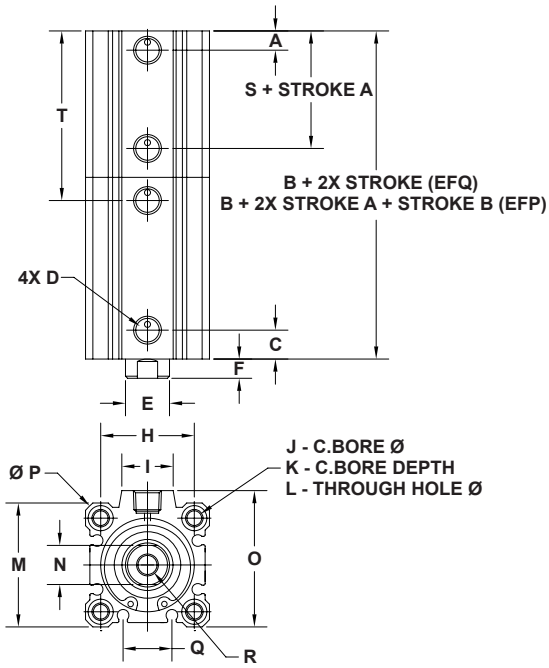

Options

Threaded Front/Rear Mount (-3) (Standard)

Bore		W*	X		Y	
12mm	(1/2")	8-32 UNC	10.5	(0.41)	7.0	(0.28)
16mm	(5/8")	8-32 UNC	10.5	(0.41)	7.0	(0.28)
20mm	(3/4")	1/4-20 UNC	17.0	(0.67)	10.0	(0.39)
25mm	(1")	1/4-20 UNC	17.0	(0.67)	10.0	(0.39)
32mm	(1-1/4")	1/4-20 UNC	17.0	(0.67)	10.0	(0.39)
40mm	(1-1/2")	1/4-20 UNC	17.0	(0.67)	10.0	(0.39)
50mm	(2")	5/16-18 UNC	22.0	(0.87)	14.0	(0.55)
63mm	(2-1/2")	7/16-14 UNC	28.5	(1.12)	18.0	(0.71)
80mm	(3-1/4")	1/2-13 UNC	35.8	(1.40)	22.0	(0.87)
100mm	(4")	1/2-13 UNC	35.8	(1.40)	22.0	(0.87)

*All four bolt holes are recommended to be used for front mounting.

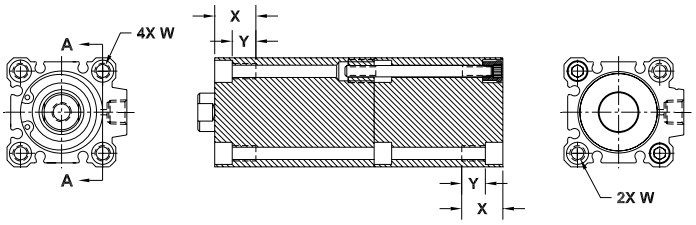

Bumpers (-B)

Stroke Reduction for all EFP/EFQ Bore Sizes

Model	Stroke Reduction mm (in)	
Double Acting Single Rod End	3.0	(1.2)

Male Rod End (-MT)

Bore		AA	BB		F	
12mm	(1/2")	8-32 UNC	8.0	(0.31)	11.5	(0.45)
16mm	(5/8")	8-32 UNC	8.0	(0.31)	11.5	(0.45)
20mm	(3/4")	10-32 UNC	8.0	(0.31)	12.5	(0.49)
25mm	(1")	1/4-28 UNC	9.5	(0.37)	14.5	(0.57)
32mm	(1-1/4")	5/16-24 UNC	12.7	(0.50)	19.7	(0.78)
40mm	(1-1/2")	3/8-24 UNC	16.0	(0.63)	23.0	(0.91)
50mm	(2")	1/2-20 UNC	19.5	(0.77)	27.5	(1.08)
63mm	(2-1/2")	1/2-20 UNC	19.5	(0.77)	27.5	(1.08)
80mm	(3-1/4")	5/8-18 UNC	25.5	(1.00)	35.5	(1.40)
100mm	(4")	5/8-18 UNC	28.5	(1.12)	40.5	(1.59)

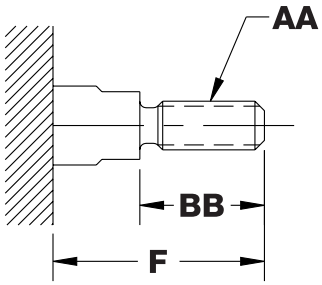

Bimba Stopper Cylinders

A Bimba EF1 Cylinder was modified for a conveyor stopping application. Featuring a heavy-duty mounting, the cylinder's rod/bearing design was developed to withstand side impact loading.

How to Order and List Prices

Model/Price	Dimensions (inch)
Model Number: EFL—Double-acting load-bearing conveyor-stop cylinder EFLR—Double-acting failsafe, spring extended Part Number: EFL or EFLR-32□-E(options) Note: Part number must include option -E; available only in inch series. Stroke Length: **15, 20, 25mm** **Blue** stroke lengths are stocked EFL/EFLR cylinders with -EM options. List Price: EFL $156.65 + $2.05/5mm stroke EFLR $172.35 + $2.05/5mm stroke Options: EE (Extra rod extension up to 25mm) $.35/mm M (MRS position sensing) $11.55 V (High Temp, to 225˚F) $20.10	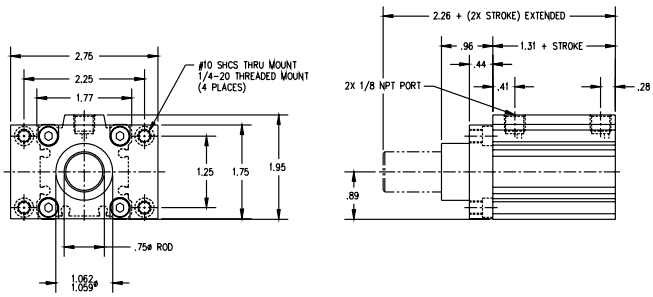

Engineering Specifications

Maximum Operating Pressure:	140 psi
Operating Temperature:	15° to 160°F (15° - 225° with -V option)
Lubrication:	PTFE Grease
Cylinder Body:	Aluminum; Hard-Coat with PTFE
Piston Rod:	303 Stainless Steel
Mounting Flange:	Anodized Aluminum
Seals:	Nitrile (fluoroelastomer optional)
Rod Bearing:	Sintered Iron
Spring Pre-final Loads:	2-8 lbs.

Impact Limitations

Maximum Side Load

Stroke (mm)	Side Load (lb)
15	12
20	11
25	10

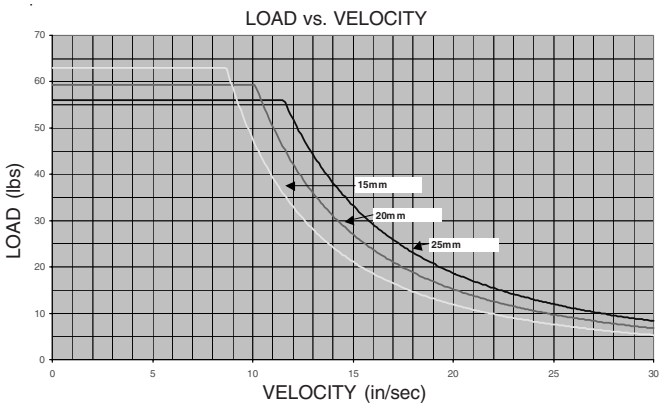

How it Works/Materials of Construction

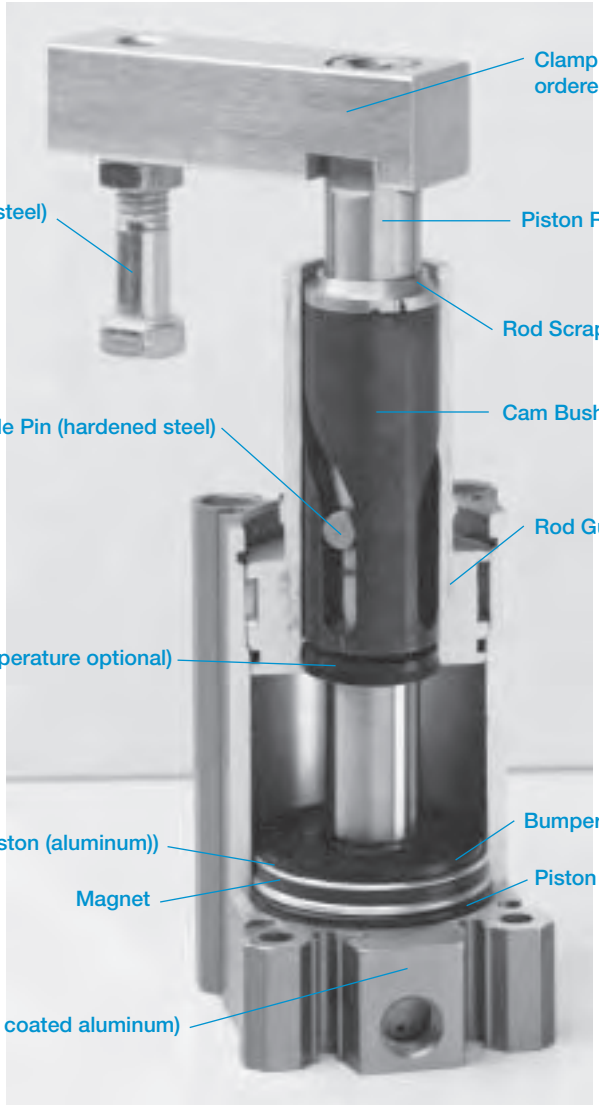

The Guide Pin rides in the Cam Bushing. The bottom portion of stroke is linear travel. As the cylinder extends, the pin follows the groove and creates 90 degrees of rotary motion.

Engineering Specifications

Operating Medium:	Air
Maximum Operating Pressure:	140 psi
Ambient and Fluid Temperature:	+15 to +160 degrees F
Lubrication:	PTFE Grease

Bimba Twist Clamp Cylinders

The Bimba Twist Clamp Cylinder combines linear and 90-degree rotary motion with an internal pin/cam mechanism. The rotary action moves a clamping arm away from the workpiece, allowing for easy loading and unloading of parts.

How to Order

The model number for all EF Twist Clamp cylinders consists of three alphanumeric clusters. These designate product type, bore size and stroke length, and options.

Please note the following features are standard, and are included in all model numbers: 3 (threaded front/rear mounting holes), E (US/inch units), and M (magnetic position sensing).

Product Type
EFCL - EF clamp cylinder, left rotation **(Left rotation is achieved as cylinder extends. As cylinder retracts, rotation will be to the right.)**
EFCR - EF clamp cylinder, right rotation

Bore Size
25 - 25mm
40 - 40mm
50 - 50mm
63 - 63mm

EFCL - 6377 - 3EM*

Stroke Length			
Bore	Rotary	Clamp	Total
25mm	20mm	15mm	35mm
40mm	28mm	15mm	43mm
50mm	39mm	38mm	77mm
63mm	39mm	38mm	77mm

*Stroke in model number is called out as TOTAL stroke.
Blue stroke lengths are stocked EFCL/EFCR cylinders with 3EM options.

Options
V - Fluoroelastomer seals (15° to 225°F)
3 - Threaded mounting holes front/rear
E - U.S. units (inch)
M - Magnet for position sensing

***Note: Options 3, E, and M are standard features and included in all model numbers**

List Prices

Bore	Base Price (includes stroke)	Options V-fluoroelastomer Seals
25mm	$210.40	$18.00
40mm	317.45	28.35
50mm	387.95	31.25
63mm	480.00	40.55

Shipping Weight

Bore	Weight
25mm	0.76
40mm	1.34
50mm	3.22
63mm	4.33

Dimensions

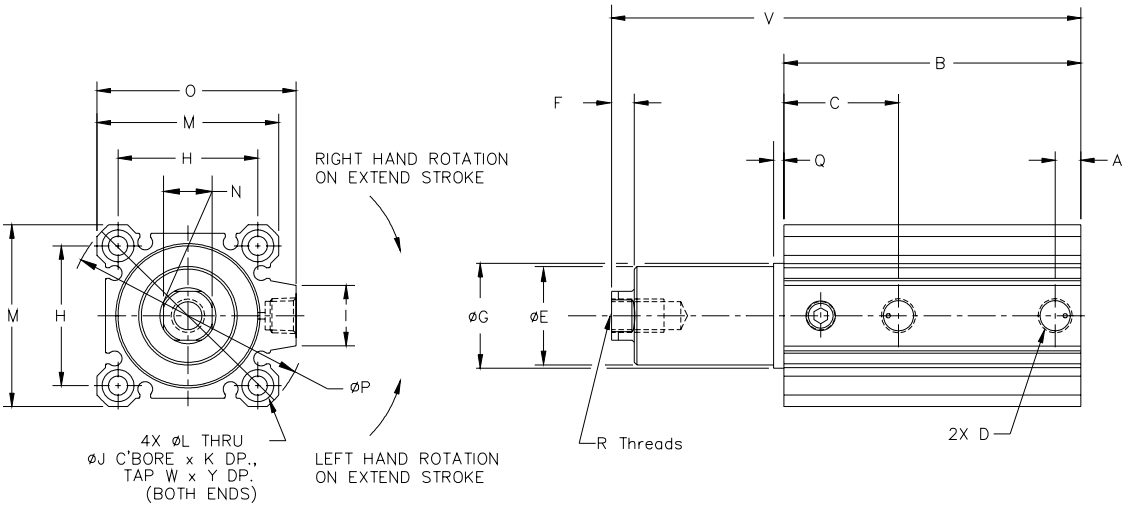

Bore	A	B	C	D	E	F	G	H	I	J
25mm	0.20	3.27	1.22	#10-32	0.84	0.16	0.905	1.10	0.41	0.35
40mm	0.29	3.34	1.29	1/8 NPT	1.12	0.26	1.180	1.57	0.68	0.35
50mm	0.37	4.98	1.29	1/4 NPT	1.39	0.30	1.456	1.97	0.79	0.44
63mm	0.38	5.12	1.37	1/4 NPT	1.82	0.30	1.888	2.36	0.79	0.56

Bore	K	L	M	N	Rod Dia.	O	P	Q	R	V	W	Y
25mm	0.28	0.22	1.57	0.39	0.47	1.57	2.05	0.16	5/16-24	4.47	1/4-20	0.67
40mm	0.28	0.22	2.05	0.54	0.63	2.24	2.72	0.11	3/8-24	5.30	1/4-20	0.67
50mm	0.31	0.27	2.52	0.66	0.79	2.80	3.39	0.14	1/2-20	8.35	5/16-18	0.86
63mm	0.41	0.35	3.03	0.66	0.79	3.31	4.06	0.16	1/2-20	8.47	7/16-14	1.12

Accessories

Clamp Arm Accessory	
Model Number	List Price
EFCA-25-E	$39.15
EFCA-40-E	39.15
EFCA-50-E	58.75
EFCA-63-E	58.75

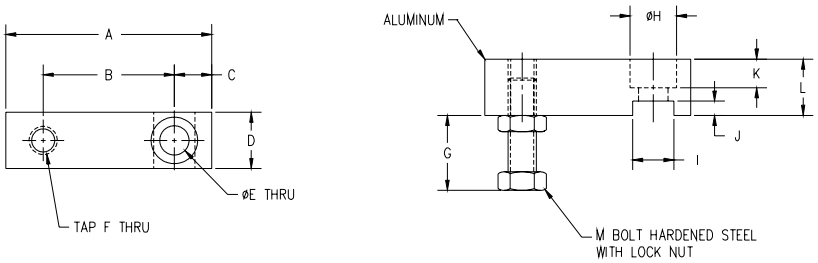

Bore	A	B	C	D	E	F	G	H	I	J	K	L	M
25mm	2.00	1.38	0.38	0.63	0.34	1/4-20	1.13	0.50	0.393	0.08	0.32	0.63	1/4-20
40mm	2.75	1.75	0.50	0.75	0.39	3/8-16	1.00	0.62	0.550	0.19	0.38	0.75	3/8-16
50mm	3.44	2.50	0.50	1.25	0.53	3/8-16	1.00	0.78	0.668	0.19	0.50	1.00	3/8-16
63mm	3.44	2.50	0.50	1.25	0.53	3/8-16	1.00	0.78	0.668	0.19	0.50	1.00	3/8-16

Engineering Specifications

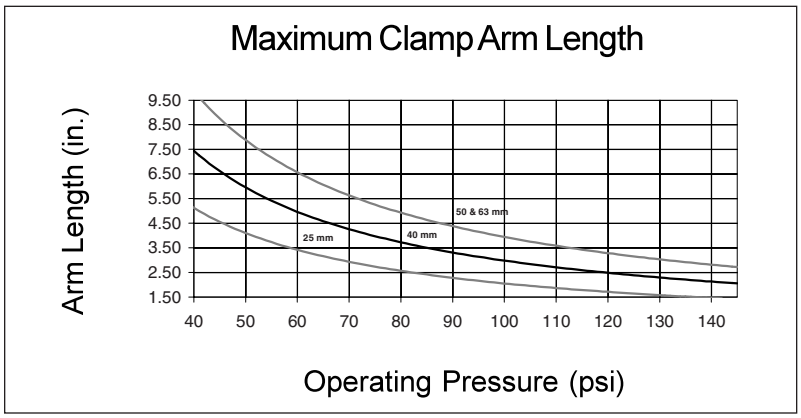

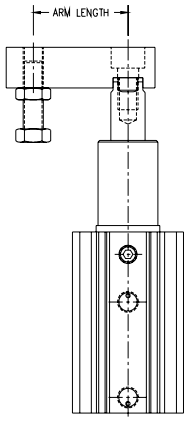

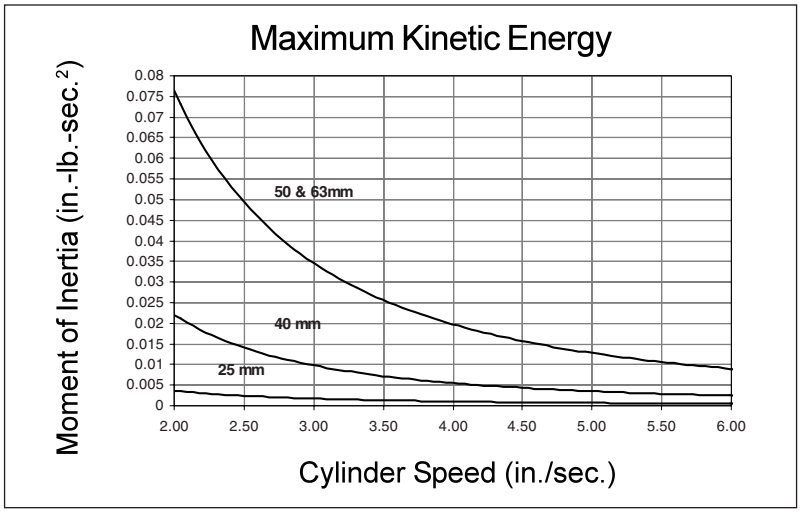

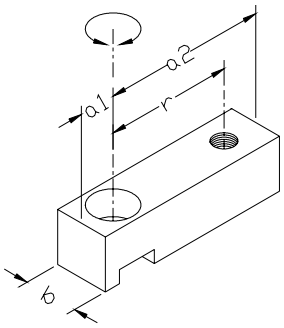

$$I = \frac{W_{a1}}{g} * \frac{4(a1)^2 + b^2}{12} + \frac{W_{a2}}{g} * \frac{4(a2)^2 + b^2}{12}$$

Example, for standard EFCA-40-E

a1 - .50 in. Wa1 = .028 lbs.
a2 = 2.25 in. Wa2 = .127 lbs.
b = .75 in.
r = 1.75 in.
g = 386 in./sec.^{2}
clamp bolt and nut = .081 lbs.

$$I \text{ arm} = \frac{.028 \text{ lb.}}{386 \text{ in./sec.}^2} * \frac{4\,(.50 \text{ in})^2 + (.75 \text{ in.})^2}{12} + \frac{.127 \text{ lb.}}{386 \text{ in./sec.}^2} * \frac{4(2.25 \text{ in})^2 + (.75 \text{ in.})^2}{12}$$

$$I \text{ arm} = .000578 \text{ in.-lb.-sec.}^2$$

$$I \text{ bolt/nut} = \frac{.081 \text{ lbs.}}{386 \text{ in./sec.}^2} * (1.75 \text{ in.})^2 = .000642 \text{ in.-lb.-sec.}^2$$

$$I \text{ total} = .000578 + .000642 = 0.00122 \text{ in.-lb.-sec.}^2$$

Operating Precautions:

- Do not clamp during rotary portion of stroke.
- Cylinder should be mounted vertically.
- Any force applied to clamped part perpendicular to clamping direction should not exceed 5% of the clamp force.

Power Factor

Bore	Power Factor
25mm	0.58
40mm	1.63
50mm	2.55
63mm	4.34

Clamp Force (lbs.) = pressure (psi) x power factor

Bimba Extruded Flat Lift Table

The Lift Table is an EF1-based, guided cylinder with four shafts for maximum rigidity. It is designed for lifting applications where other non-rotating cylinders cannot handle an overhung load and space is at a premium.

- Four-shaft support withstands offset loads and moments.
- Simple, efficient design provides economical alternative to other costly guided actuators.
- Joins the EF family of products and shares all the same benefits--long service life, low friction operation, fast delivery.
- Convenient wide tooling mounting surface.
- Intended for vertical lifting applications and should not be mounted horizontally or with tooling plates facing down.

How to Order

Type
EFF - Double-Acting Non-Rotating Lift Table

Bore Size
50 - 50mm
80 - 80mm
125 - 125mm

Stroke Length
5mm increments to 100mm max

Options
B - Internal Bumpers[1]
E - U.S. Customary (inch)[2]
M - Magnetic Position Sensing
V - High Temperature (15°F to 225°F)

[1]Bumper on rod end only and stroke is reduced by 0.06"
[2]Inch-series only; include "E" option in all model numbers

EFF - 80 50 - EM

List Prices

	50mm	80mm	125mm
Base	$199.40	$298.75	$497.70
Add per 5mm	5.05	5.65	6.90
B	9.75	17.50	25.65
M	13.60	21.45	33.45
V	31.70	50.35	83.15

Engineering Specifications

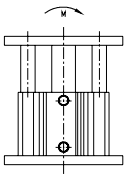

Maximum Moment
Due to Side or Overhung Load

Bore	Max Moment
50mm	45 in-lb
80mm	125 in-lb
125mm	175 in-lb

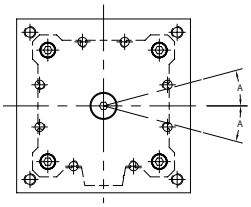

Non-Rotational Accuracy

Bore	Accuracy (A)
50mm	+/- .17°
80mm	+/- .14°
125mm	+/- .11°

Materials of Construction

Component	Material
Cylinder Body	PTFE-impregnated hard anodized aluminum
Rear Mounting Plate	Anodized Aluminum
Guide Shafts	Hard Chrome Plated Stainless Steel
Guide Shaft Bearings	Composite Plastic
Tooling Plate	Anodized Aluminum
Piston Rod	Stainless Steel
Rod Guide	Aluminum Alloy
Seals	Nitrile (Fluoroelastomer optional)
Piston	Aluminum Alloy

Bimba Extruded Flat Lift Table

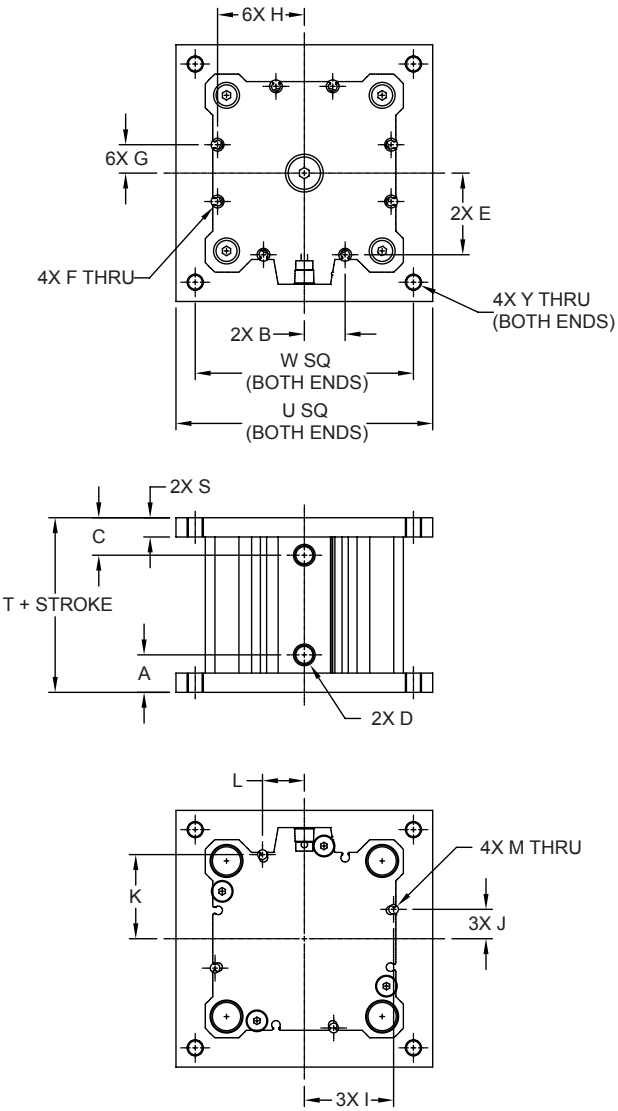

Bore	A	B	C	D	E	F	G	H	I	J	K	L	M	S	T	U	W	Y
50mm	0.58	0.56	0.58	1/8 NPT	1.06	0.25	0.58	1.05	1.09	0.60	1.11	0.58	0.25	0.25	See Table Below	3.00	2.50	#10-32 UNF
80mm	0.73	0.80	0.73	1/8 NPT	1.59	0.25	0.55	1.68	1.74	0.57	1.64	0.82	0.19	0.38		5.00	4.25	5/16-24 UNF
125mm	1.00	1.07	1.00	3/8 NPT	2.43	0.25	0.85	2.52	2.57	0.87	2.48	1.09	0.19	0.50		7.00	5.88	1/2-20 UNF

Overall Length, Dimension “T”

Bore	Without M Option	With M Option
50mm	Strokes: 0-24mm	Strokes: 0-21mm
	1.86	2.42
	Strokes: 25-100mm	Strokes: 22-100mm
	0.88 + Stroke	1.59 + Stroke
80mm	Strokes: 0-22mm	Strokes: 0-18mm
	2.14	2.30
	Strokes: 23-100mm	Strokes: 19-100mm
	1.28 + Stroke	1.59 + Stroke
125mm	Strokes: 0-37mm	Strokes: 0-30mm
	3.03	3.25
	Strokes: 38-100mm	Strokes: 31-100mm
	1.58 + Stroke	2.17 + Stroke

Bimba Metric Twin Bore Series Cylinders

The Bimba Twin Bore Cylinder is a small cross-section, double-bore cylinder that provides highly accurate linear motion. The cylinder incorporates extra long piston rod bearings, resulting in high radial load capacity. Single and double end rod units are available in both Delrin® and ball bushing styles. The highly precise Air Table incorporates a rigid linear rail with recirculating ball bearings.

Basic Twin Bore (TB)

- Dual bores exert twice the force of a traditional cylinder while providing smooth, non-rotating actuation. The cylinder is symmetric and can be mounted from either side to allow convenient port access.

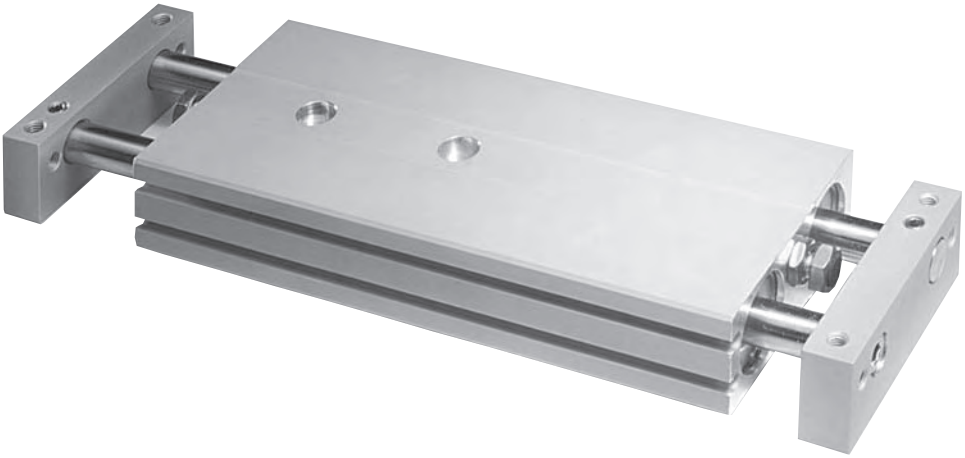

Double End Twin Bore (TBD)

- Double rod end provides a saddle-mount unit with improved loading and resistance to deflection.

Twin Bore Air Table (TBA)

- Smooth, precise movement is achieved via integration of a highly accurate recirculating ball bushing rail.

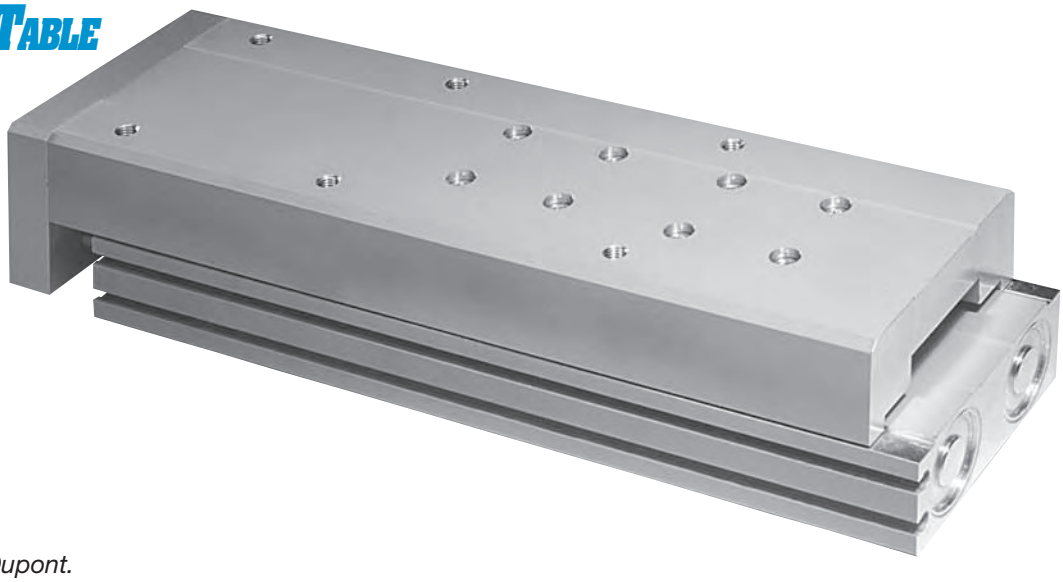

Delrin® is a trademark of Dupont.

How to Order

The model number for all Twin Bore cylinders consists of three alphanumeric clusters. These designate product type, bore size and stroke length, and options. Please refer to the charts below for an example of model number TB-1610-EX. This is a double-acting 16mm bore, Twin Bore Cylinder, with 10mm stroke, ball bushings, and U.S. customary threads.

PRODUCT TYPE

TB - Twin Bore Actuator
TBD - Twin Bore; Double End
TBA - Twin Bore Air Table

BORE SIZE

6mm
8mm
12mm
16mm
20mm
25mm
32mm

STANDARD STROKE LENGTHS (mm)	BORE SIZE													
	TB & TBD							TBA						
	6	8	12	16	20	25	32	6	8	12	16	20	25	32
10	X	X	X	X	X	X	X	X	X	X	X	X	X	X
15	N/A	N/A	X	X	X	X	X	N/A	N/A	N/A	N/A	N/A	N/A	N/A
20	X	X	X	X	X	X	X	X	X	X	X	X	X	X
25	N/A	N/A	X	X	X	X	X	N/A	N/A	N/A	N/A	N/A	N/A	N/A
30	X	X	X	X	X	X	X	X	X	X	X	X	X	X
35	N/A	N/A	X	X	X	X	X	N/A	N/A	N/A	N/A	N/A	N/A	N/A
40	X	X	X	X	X	X	X	X	X	X	X	X	X	X
45	N/A	N/A	X	X	X	X	X	N/A	N/A	N/A	N/A	N/A	N/A	N/A
50	X	X	X	X	X	X	X	X	X	X	X	X	X	X
60	N/A	N/A	X	X	X	X	X	N/A	N/A	N/A	N/A	N/A	N/A	N/A
70	N/A	N/A	X	X	X	X	X	N/A	N/A	N/A	N/A	N/A	N/A	N/A
75	N/A	X	X	X	X	X	X	N/A	X	X	X	X	X	X
80	N/A	N/A	N/A	X	X	X	X	N/A	N/A	N/A	N/A	N/A	N/A	N/A
90	N/A	N/A	N/A	X	X	X	X	N/A	N/A	N/A	N/A	N/A	N/A	N/A
100	N/A	N/A	N/A	X	X	X	X	N/A	N/A	X	X	X	X	X
125	N/A	N/A	N/A	N/A	N/A	N/A	N/A	N/A	N/A	N/A	X	X	X	X
150	N/A	N/A	N/A	N/A	N/A	N/A	N/A	N/A	N/A	N/A	N/A	X	X	X

TB-1610-EX

OPTIONS

(Enter in alphabetical order)

A1 – Stroke adjustment, both ends[1]
A2 – Stroke adjustment, extend only[1]
A3 – Stroke adjustment, retract only[1]
E – U.S. customary units (inch)
F – Full-Flow Port Orifice
K_ _ – Shock absorbers[1 3]
First_ will be: 1-Shock both ends
2-Shock extend only
3-Shock retract only
Second_ will be: 1-Light Shock
2-Standard shock
3-Heavy shock[4]
M – Magnetic position sensing
S – Side mounting holes[2]
V – High temperature; -15° to 135°C (0° to 275°F)[3 4]
X – Ball bushings[2 3 4]

Combination Availability

Options	All Bore Sizes
A1	E; M; V
A2	E; K31, 2,or 3; M; V
A3	E; K21, 2,or 3, M; V
E	A1, 2,or 3; K11, 2,or 3; K21, 2,or 3; K31, 2,or 3; M; S; V; X
K11, 2 or 3	E; M; V
K21, 2 or 3	A3; E; M; V
K31, 2 or 3	A2; E; M; V
M	A1, 2,or 3; K11, 2,or 3; E; K21, 2,or 3; K31, 2,or 3; S; V; X
S	E; M; V; X
V	A1, 2,or 3; E; K11, 2,or 3; K21, 2,or 3; K31, 2,or 3; M; S; X
X	E; M; S; V

Bumpers standard on all models
[1]TBA Models Only
[2]TB and TBD Models Only
NOTE: TB and TBD stroke lengths are available in any 0.1mm increment up to 225mm maximum (12 – 32 bores only). Consult your distributor for pricing of any stroke length not listed as standard above. TBA models available only in those stroke lengths listed as standard above.
[3]Not available on 6mm bore
[4]Not available on 8mm bore

List Prices

Model Type	Bore Size						
	6mm	8mm	12mm	16mm	20mm	25mm	32mm
TB	$ 91.65	$ 90.00	$ 89.55	$ 87.35	$ 93.65	$100.75	$108.85
add per 5mm	1.95	1.95	2.40	3.95	3.95	3.95	4.60
TBD	186.50	190.15	149.70	152.85	163.75	175.20	190.40
add per 5mm	4.70	4.70	5.70	7.75	7.75	7.75	9.05
TBA; Prices by Stroke							
10mm	265.30	289.05	361.20	371.85	444.00	513.90	575.20
20mm	295.30	302.60	361.20	371.85	444.00	513.90	575.20
30mm	321.80	334.45	361.20	371.85	444.00	513.90	575.20
40mm	416.30	423.30	393.85	405.90	484.40	561.45	628.85
50mm	449.40	463.35	425.95	436.80	524.40	609.30	682.40
75mm	N/A	483.20	490.75	518.10	583.35	680.95	762.45
100mm	N/A	N/A	585.20	599.05	680.00	775.95	869.30
125mm	N/A	N/A	N/A	693.20	774.50	881.05	986.70
150mm	N/A	N/A	N/A	N/A	868.75	985.80	1104.35

Options	Bore Size						
	6mm	8mm	12mm	16mm	20mm	25mm	32mm
A- Stroke Adjustment (TBA; per end)	$ 30.60	$ 31.75	$ 34.10	$ 34.10	$ 39.30	$ 39.30	$ 45.60
F-Full-flow Port Orifice	N/A	N/A	6.75	6.75	6.75	8.55	8.55
K- Shock Absorbers (TBA; per end)	N/A	75.40	81.35	81.35	97.65	107.30	117.25
M - MRS Position Sensing	5.20	5.55	6.15	6.75	7.30	8.00	8.55
S - Side Mount Holes	4.05	4.30	4.90	4.90	5.80	5.80	6.75
V - High Temperature	N/A	N/A	13.40	15.75	15.75	18.20	20.90
X - Ball Bushings (TB)	N/A	N/A	40.75	41.70	51.55	52.80	71.50
X - Ball Bushings (TBD)	N/A	N/A	81.35	83.20	102.80	105.45	142.80

No Charge Options: E

TB Cylinder

Dimensions mm (inch)

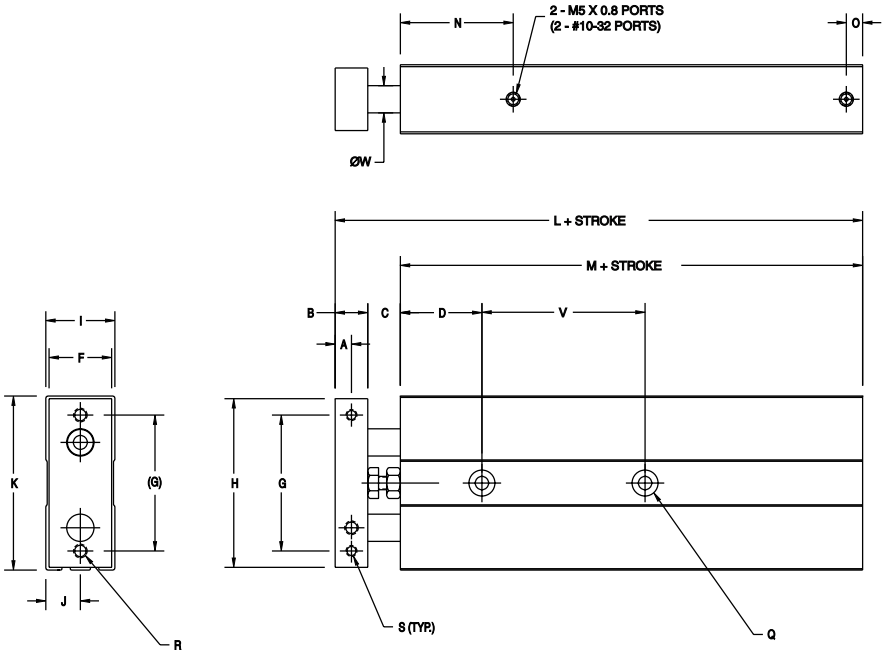

Bore	A	B	C	D	F	G	H	I	J	K	L	M
6	2.8 (0.11)	5.5 (0.22)	8 (0.32)	13 (0.51)	12 (0.47)	25 (0.98)	31 (1.22)	13.2 (0.52)	6.4 (0.25)	32 (1.26)	58.5 (2.30)	45 (1.77)
8	3 (0.12)	6 (0.24)	8 (0.32)	13 (0.51)	13 (0.51)	28 (1.10)	36 (1.42)	14.7 (0.58)	7.3 (0.29)	37.8 (1.49)	64 (2.52)	50 (1.97)
12	4 (0.16)	8 (0.32)	9 (0.35)	20 (0.79)	15 (0.59)	35 (1.38)	44 (1.73)	17.3 (0.68)	8.7 (0.34)	46 (1.81)	72 (2.83)	55 (2.17)
16	5 (0.20)	10 (0.39)	9 (0.35)	30 (1.18)	18 (0.71)	45 (1.77)	55 (2.17)	20.4 (0.80)	10.2 (0.40)	57 (2.24)	80 (3.16)	61 (2.41)
20	6 (0.24)	12 (0.47)	12 (0.47)	30 (1.18)	23 (0.91)	50 (1.97)	62 (2.44)	25.4 (1.00)	12.7 (0.50)	64 (2.52)	94 (3.70)	70 (2.76)
25	6 (0.24)	12 (0.47)	12 (0.47)	30 (1.18)	28 (1.10)	66 (2.60)	78 (3.07)	30.4 (1.20)	15.2 (0.60)	80 (3.15)	96 (3.78)	72 (2.84)
32	8 (0.32)	16 (0.63)	14 (0.55)	30 (1.18)	36 (1.42)	80 (3.15)	96 (3.78)	38.4 (1.51)	19.2 (0.76)	98 (3.86)	115 (4.51)	85 (3.33)

Bore	N	O	Q (Body Mounting Holes)	R	S	T (Ports)
6	16 (0.63)	6.7 (0.27)	M4x0.7 6H (#8-32 UNC-2B)	M3x0.5 6H (#4-40 UNC-2B)	M3x0.5 6H (#4-40 UNC-2B)	M5x0.8 6H (#10-32 UNF-2B)
8	16.1 (0.64)	6.7 (0.27)	M4x0.7 6H (#8-32 UNC-2B)	M3x0.5 6H (#4-40 UNC-2B)	M3x0.5 6H (#4-40 UNC-2B)	M5x0.8 6H (#10-32 UNF-2B)
12	30.6 (1.20)	5 (0.20)	M4x0.7 6H (#8-32 UNC-2B)	M4x0.7 6H (#8-32 UNC-2B)	M3x0.5 6H (#4-40 UNC-2B)	M5x0.8 6H (#10-32 UNF-2B)
16	36.2 (1.42)	4.5 (0.18)	M5x0.8 6H (#10-32 UNF-2B)	M5x0.8 6H (#10-32 UNF-2B)	M4x0.7 6H (#8-32 UNC-2B)	M5x0.8 6H (#10-32 UNF-2B)
20	41.5 (1.63)	6 (0.24)	M6x1 6H (1/4-20 UNC-2B)	M5x0.8 6H (#10-32 UNF-2B)	M4x0.7 6H (#8-32 UNC-2B)	M5x0.8 6H (#10-32 UNF-2B)
25	45 (1.77)	5 (0.20)	M8x1.25 6H (5/16-18 UNC-2B)	M6x1 6H (1/4-20 UNC-2B)	M5x0.8 6H (#10-32 UNF-2B)	M5x0.8 6H (#10-32 UNF-2B)
32	53 (2.09)	7.2 (0.28)	M8x1.25 6H (5/16-18 UNC-2B)	M6x1 6H (1/4-20 UNC-2B)	M5x0.8 6H (#10-32 UNF-2B)	G 1/8 (NPT 1/8)

Bore	V Based on Stroke											W
	0-10mm	11-20mm	0-20mm	21-25mm	21-30mm	26-50mm	31-40mm	41-50mm	51-75mm	51-80mm	81-100mm	
6	15 (0.59)	20 (0.79)	N/A N/A	N/A N/A	25 (0.98)	N/A N/A	30 (1.18)	35 (1.38)	N/A N/A	N/A N/A	N/A N/A	3 (.12)
8	15 (0.59)	20 (0.79)	N/A N/A	N/A N/A	25 (0.98)	N/A N/A	30 (1.18)	35 (1.38)	47.5 (1.87)	N/A N/A	N/A N/A	4 (.16)
12	N/A N/A	N/A N/A	30 (1.18)	30 (1.18)	N/A N/A	40 (1.58)	N/A N/A	N/A N/A	N/A N/A	50 (1.97)	N/A N/A	6 (.24)
16	N/A N/A	N/A N/A	25 (0.98)	35 (1.38)	N/A N/A	35 (1.38)	N/A N/A	N/A N/A	N/A N/A	45 (1.77)	55 (2.17)	8 (.32)
20	N/A N/A	N/A N/A	30 (1.18)	30 (1.18)	N/A N/A	40 (1.58)	N/A N/A	N/A N/A	N/A N/A	60 (2.36)	60 (2.36)	10 (.39)
25	N/A N/A	N/A N/A	30 (1.18)	30 (1.18)	N/A N/A	40 (1.58)	N/A N/A	N/A N/A	N/A N/A	60 (2.36)	60 (2.36)	12 (.47)
32	N/A N/A	N/A N/A	40 (1.58)	40 (1.58)	N/A N/A	50 (1.97)	N/A N/A	N/A N/A	N/A N/A	70 (2.76)	70 (2.76)	16 (.63)

TBD Cylinder

Dimensions mm (inch)

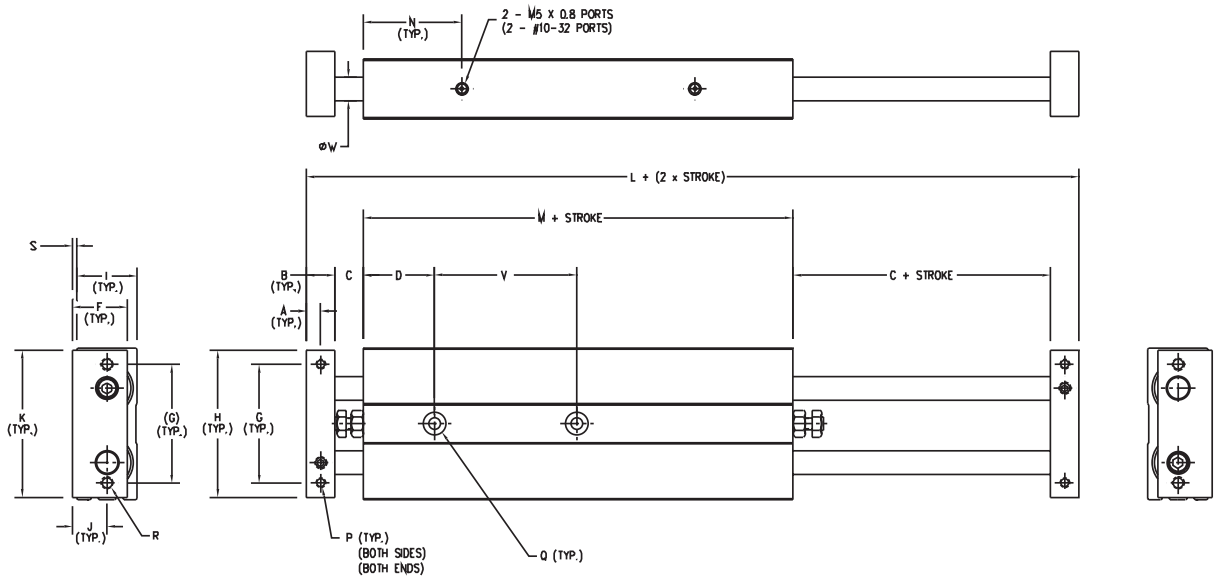

Bore	A	B	C	D	F	G	H	I	J	K	L	M	N
6	2.8 (0.11)	5.5 (0.22)	8 (0.32)	13 (0.51)	12 (0.47)	25 (0.98)	31 (1.22)	13.2 (0.52)	7.8 (0.31)	32 (1.26)	92.9 (3.66)	66 (2.60)	16 (0.63)
8	3 (0.12)	6 (0.24)	8 (0.32)	13 (0.51)	13 (0.51)	28 (1.10)	36 (1.42)	14.7 (0.58)	8.6 (0.34)	37.8 (1.49)	92.9 (3.66)	66 (2.60)	16.1 (0.64)
12	4 (0.16)	8 (0.32)	9 (0.35)	20 (0.79)	15 (0.59)	35 (1.38)	44 (1.73)	17.3 (0.68)	10.4 (0.41)	46 (1.81)	116.3 (4.58)	82.3 (3.24)	30.6 (1.20)
16	5 (0.20)	10 (0.39)	9 (0.35)	30 (1.18)	18 (0.71)	45 (1.77)	55 (2.17)	20.4 (0.80)	12.0 (0.47)	57 (2.24)	131.5 (5.16)	93.5 (3.68)	36.2 (1.42)
20	6 (0.24)	12 (0.47)	12 (0.47)	30 (1.18)	23 (0.91)	50 (1.97)	62 (2.44)	25.4 (1.00)	14.5 (0.57)	64 (2.52)	154.2 (6.07)	106.2 (4.18)	41.5 (1.63)
25	6 (0.24)	12 (0.47)	12 (0.47)	30 (1.18)	28 (1.10)	66 (2.60)	78 (3.07)	30.4 (1.20)	17.0 (0.67)	80 (3.15)	160.9 (6.33)	112.9 (4.45)	45 (1.77)
32	8 (0.32)	16 (0.63)	14 (0.55)	30 (1.18)	36 (1.42)	80 (3.15)	96 (3.78)	38.4 (1.51)	21.0 (0.83)	98 (3.86)	192.6 (7.58)	132.6 (5.22)	53 (2.09)

Bore	P	Q (Body Mounting Holes)	R	S	T (Ports)
6	M3x0.5 6H (#4-40 UNC-2B)	M4x0.7 6H (#8-32 UNC-2B)	M3x0.5 6H (#4-40 UNC-2B)	1.3 (.05)	M5x0.8 6H (#10-32 UNF-2B)
8	M3x0.5 6H (#4-40 UNC-2B)	M4x0.7 6H (#8-32 UNC-2B)	M3x0.5 6H (#4-40 UNC-2B)	1.3 (.05)	M5x0.8 6H (#10-32 UNF-2B)
12	M3x0.5 6H (#4-40 UNC-2B)	M4x0.7 6H (#8-32 UNC-2B)	M4x0.7 6H (#8-32 UNC-2B)	1.8 (.07)	M5x0.8 6H (#10-32 UNF-2B)
16	M4x0.7 6H (#8-32 UNC-2B)	M5x0.8 6H (#10-32 UNF-2B)	M5x0.8 6H (#10-32 UNF-2B)	1.8 (.07)	M5x0.8 6H (#10-32 UNF-2B)
20	M4x0.7 6H (#8-32 UNC-2B)	M6x1 6H (1/4-20 UNC-2B)	M5x0.8 6H (#10-32 UNF-2B)	1.8 (.07)	M5x0.8 6H (#10-32 UNF-2B)
25	M5x0.8 6H (#10-32 UNF-2B)	M8x1.25 6H (5/16-18 UNC-2B)	M6x1 6H (1/4-20 UNC-2B)	1.8 (.07)	M5x0.8 6H (#10-32 UNF-2B)
32	M5x0.8 6H (#10-32 UNF-2B)	M8x1.25 6H (5/16-18 UNC-2B)	M6x1 6H (1/4-20 UNC-2B)	1.8 (.07)	G 1/8 (NPT 1/8)

Bore	V Based on Stroke											W
	0-10mm	11-20mm	0-20mm	21-25mm	21-30mm	26-50mm	31-40mm	41-50mm	51-75mm	51-80mm	81-100mm	
6	15 (0.59)	20 (0.79)	N/A N/A	N/A N/A	25 (0.98)	N/A N/A	30 (1.18)	35 (1.38)	N/A N/A	N/A N/A	N/A N/A	3 (.12)
8	15 (0.59)	20 (0.79)	N/A N/A	N/A N/A	25 (0.98)	N/A N/A	30 (1.18)	35 (1.38)	47.5 (1.87)	N/A N/A	N/A N/A	4 (.16)
12	N/A N/A	N/A N/A	30 (1.18)	30 (1.18)	N/A N/A	40 (1.58)	N/A N/A	N/A N/A	N/A N/A	50 (1.97)	N/A N/A	6 (.24)
16	N/A N/A	N/A N/A	25 (0.98)	35 (1.38)	N/A N/A	35 (1.38)	N/A N/A	N/A N/A	N/A N/A	45 (1.77)	55 (2.17)	8 (.32)
20	N/A N/A	N/A N/A	30 (1.18)	30 (1.18)	N/A N/A	40 (1.58)	N/A N/A	N/A N/A	N/A N/A	60 (2.36)	60 (2.36)	10 (.39)
25	N/A N/A	N/A N/A	30 (1.18)	30 (1.18)	N/A N/A	40 (1.58)	N/A N/A	N/A N/A	N/A N/A	60 (2.36)	60 (2.36)	12 (.47)
32	N/A N/A	N/A N/A	40 (1.58)	40 (1.58)	N/A N/A	50 (1.97)	N/A N/A	N/A N/A	N/A N/A	70 (2.76)	70 (2.76)	16 (.63)

TBA Cylinder: 6mm Bore

Dimensions mm (inch)

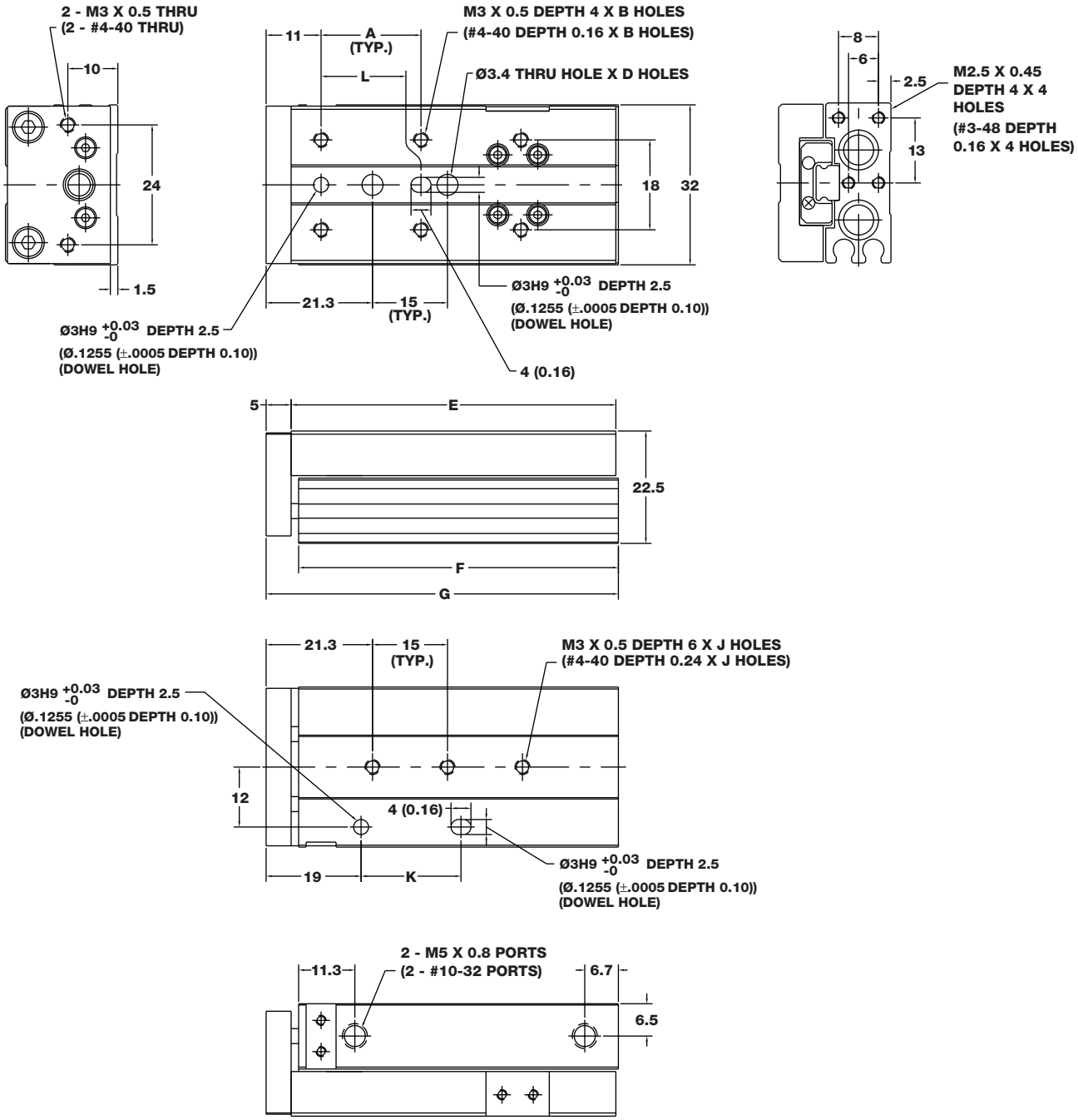

Stroke	A	B	D	E	F	G	J	K	L
10	20 (0.79)	4	2	45 (1.77)	44 (1.73)	50.5 (1.99)	2	16 (0.630)	20 (0.787)
20	30 (1.18)	4	2	55 (2.17)	54 (2.13)	60.5 (2.38)	3	18 (0.709)	20 (0.787)
30	20 (0.79)	6	2	65 (2.56)	64 (2.52)	70.5 (2.78)	3	20 (0.787)	20 (0.787)
40	28 (1.10)	6	3	95 (3.74)	94 (3.70)	100.5 (3.96)	5	28 (1.102)	35 (1.378)
50	38 (1.50)	6	3	104.5 (4.11)	104.5 (4.11)	111 (4.37)	6	28 (1.102)	35 (1.378)

TBA Cylinder: 8mm Bore

Dimensions mm (inch)

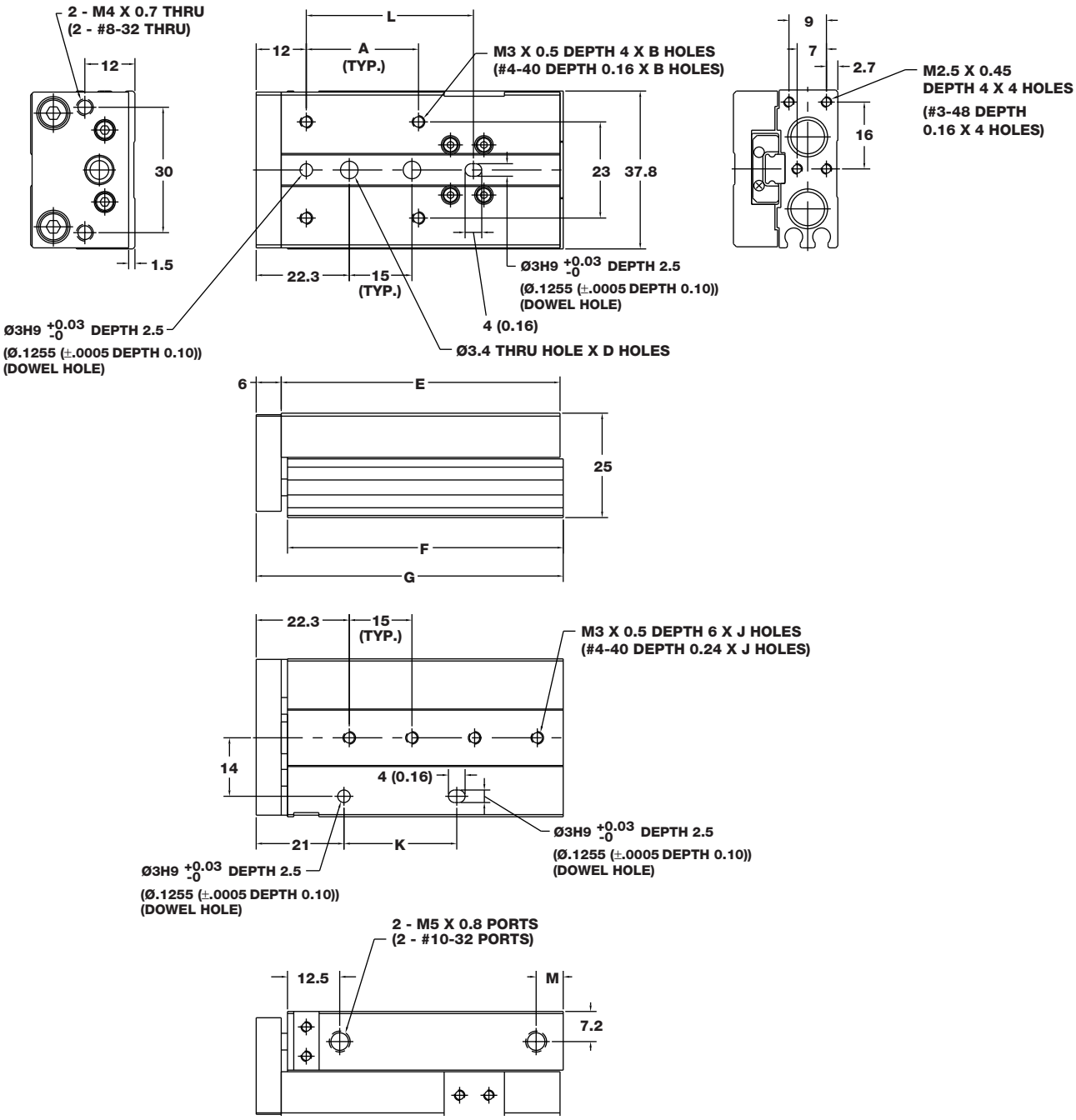

Stroke	A	B	D	E	F	G	J	K	L	M
10	25 (0.98)	4	3	49.7 (1.96)	49 (1.93)	55.5 (2.19)	3	19 (0.748)	18 (0.709)	6.5 (0.26)
20	25 (0.98)	4	3	56.7 (2.23)	56 (2.21)	62.5 (2.46)	3	28 (1.102)	18 (0.709)	6.5 (0.26)
30	40 (1.58)	4	2	66.7 (2.63)	66 (2.60)	72.5 (2.85)	3	28 (1.102)	40 (1.575)	6.5 (0.26)
40	50 (1.97)	4	3	91.2 (3.59)	90.4 (3.56)	97 (3.82)	5	31 (1.220)	50 (1.969)	11 (0.43)
50	38 (1.50)	6	3	102.3 (4.03)	101.5 (4.0)	108 (4.25)	6	58 (2.283)	50 (1.969)	6.5 (0.26)
75	50 (1.97)	6	5	133.7 (5.27)	133 (5.24)	139.5 (5.49)	8	60 (2.362)	50 (1.969)	6.5 (0.26)

TBA Cylinder: 12mm Bore

Dimensions mm (inch)

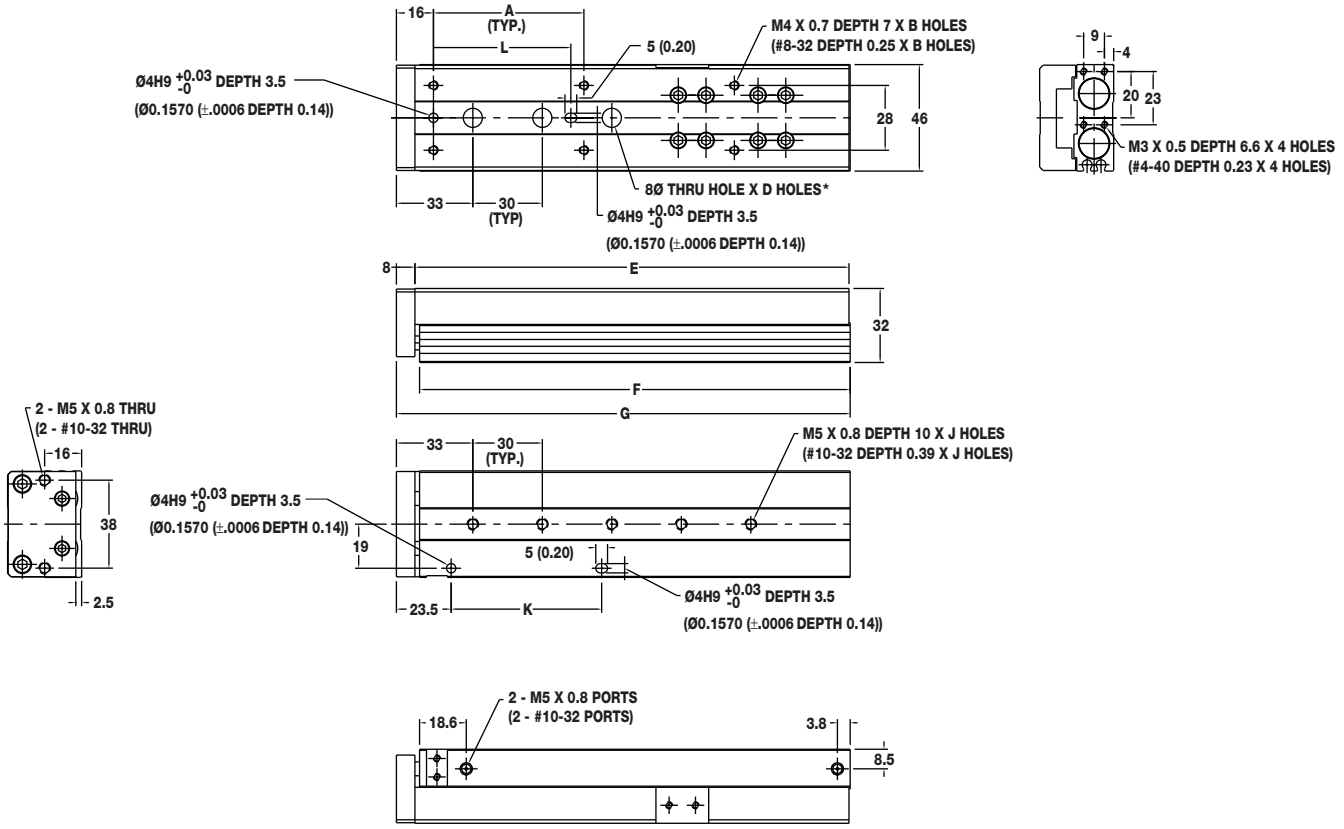

*Thru holes go through table top to access smaller counterbored mounting holes in the cylinder body.

Stroke	A	B	D	E	F	G	J	K	L
10	35 (1.38)	4	1	73 (2.86)	71 (2.80)	81 (3.20)	2	35 (1.378)	35 (1.378)
20	35 (1.38)	4	1	73 (2.86)	71 (2.80)	81 (3.20)	2	35 (1.378)	35 (1.378)
30	35 (1.38)	4	1	73 (2.86)	71 (2.80)	81 (3.20)	2	35 (1.378)	35 (1.378)
40	50 (1.97)	4	1	85 (3.36)	83 (3.28)	93 (3.67)	2	50 (1.968)	50 (1.968)
50	35 (1.38)	6	1	105 (4.12)	103 (4.06)	113 (4.46)	3	35 (1.378)	35 (1.378)
75	55 (2.17)	6	2	151 (5.93)	149 (5.88)	159 (6.27)	4	55 (2.165)	55 (2.165)
100	65 (2.56)	6	3	189 (7.43)	187 (7.37)	197 (7.76)	5	65 (2.559)	65 (2.559)

TBA Cylinder: 16mm Bore

Dimensions mm (inch)

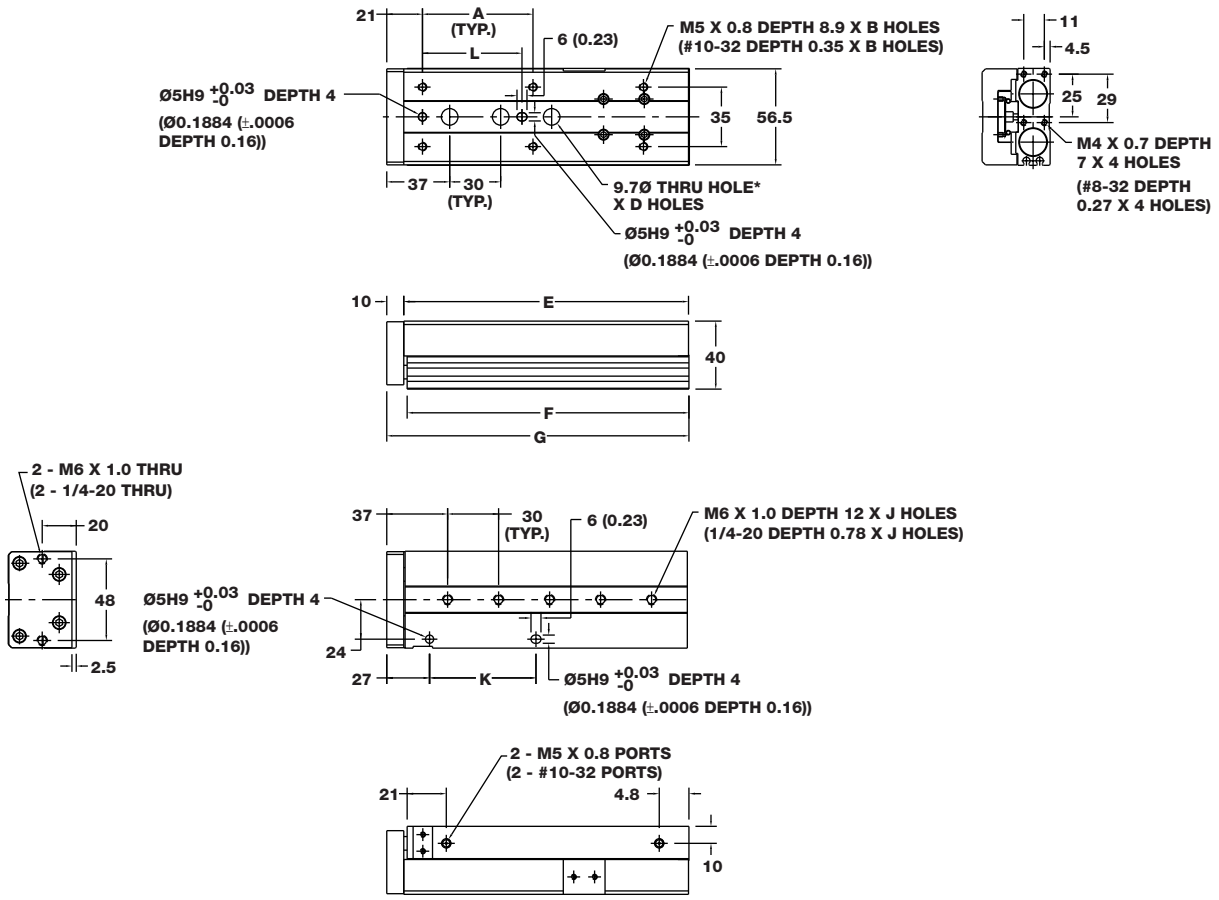

*Thru holes go through table top to access smaller counterbored mounting holes in the cylinder body.

Stroke	A	B	D	E	F	G	J	K	L
10	35 (1.38)	4	1	79 (3.11)	77 (3.05)	89 (3.52)	2	35 (1.378)	35 (1.378)
20	35 (1.38)	4	1	79 (3.11)	77 (3.05)	89 (3.52)	2	35 (1.378)	35 (1.378)
30	35 (1.38)	4	1	79 (3.11)	77 (3.05)	89 (3.52)	2	35 (1.378)	35 (1.378)
40	40 (1.58)	6	1	89 (3.50)	87 (3.44)	99 (3.91)	3	40 (1.575)	40 (1.575)
50	30 (1.18)	6	1	116 (4.56)	114 (4.51)	126 (4.98)	3	30 (1.181)	30 (1.181)
75	55 (2.17)	6	2	145 (5.71)	143 (5.65)	155 (6.12)	4	55 (2.165)	55 (2.165)
100	65 (2.56)	6	3	170 (6.69)	168 (6.63)	180 (7.10)	5	65 (2.559)	65 (2.559)
125	70 (2.70)	8	4	205 (8.07)	203 (8.01)	215 (8.48)	6	70 (2.756)	70 (2.756)

TBA Cylinder: 20mm Bore

Dimensions mm (inch)

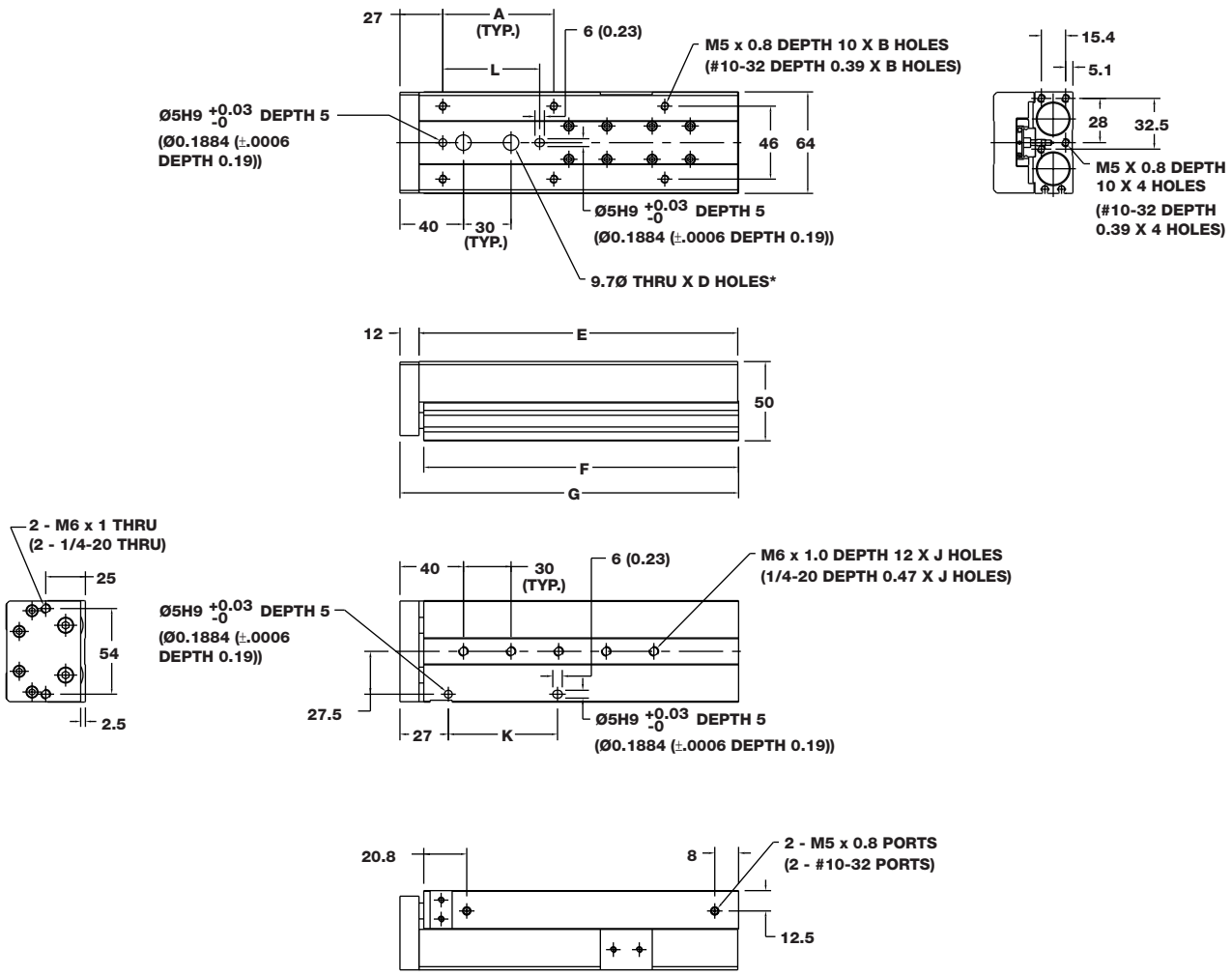

*Thru holes go through table top to access smaller counterbored mounting holes in the cylinder body.

Stroke	A	B	D	E	F	G	J	K	L
10	50 (1.97)	4	1	84 (3.30)	81.5 (3.21)	96 (3.78)	2	50 (1.968)	50 (1.968)
20	50 (1.97)	4	1	84 (3.30)	81.5 (3.21)	96 (3.78)	2	50 (1.968)	50 (1.968)
30	50 (1.97)	4	1	84 (3.30)	81.5 (3.21)	96 (3.78)	2	50 (1.968)	50 (1.968)
40	60 (2.36)	4	1	94 (3.69)	91.5 (3.60)	106 (4.17)	2	60 (2.362)	60 (2.362)
50	35 (1.38)	6	1	108.5 (4.27)	106.5 (4.19)	121 (4.76)	3	35 (1.378)	35 (1.378)
75	60 (2.36)	6	2	140 (5.51)	138 (5.44)	152.5 (6.01)	4	60 (2.362)	60 (2.362)
100	70 (2.76)	6	3	200.5 (7.89)	198.5 (7.82)	213 (8.39)	5	70 (2.756)	64 (2.520)
125	70 (2.76)	8	4	230 (9.06)	228 (8.98)	242.5 (9.55)	6	70 (2.756)	64 (2.520)
150	80 (3.15)	8	5	263 (10.36)	261 (10.28)	275.5 (10.85)	7	80 (3.150)	80 (3.150)

TBA Cylinder: 25mm Bore

Dimensions mm (inch)

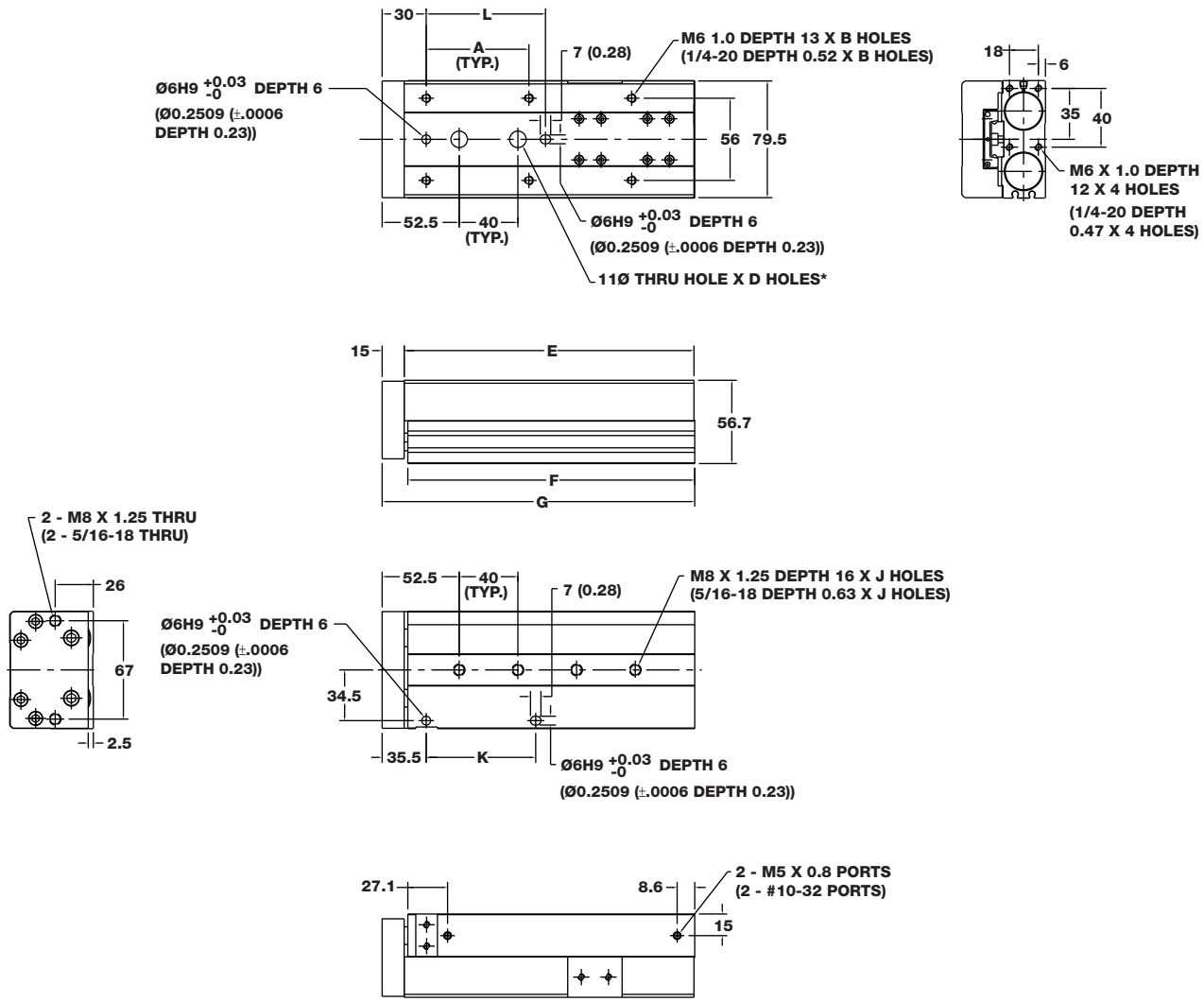

*Thru holes go through table top to access smaller counterbored mounting holes in the cylinder body.

Stroke	A	B	D	E	F	G	J	K	L
10	50 (1.97)	4	1	92.5 (3.64)	90.5 (3.56)	108 (4.25)	2	50 (1.968)	50 (1.968)
20	50 (1.97)	4	1	92.5 (3.64)	90.5 (3.56)	108 (4.25)	2	50 (1.968)	50 (1.968)
30	50 (1.97)	4	1	92.5 (3.64)	90.5 (3.56)	108 (4.25)	2	50 (1.968)	50 (1.968)
40	60 (2.36)	4	1	102.5 (4.04)	100.5 (3.96)	118 (4.65)	2	60 (2.362)	60 (2.362)
50	35 (1.38)	6	1	115.5 (4.55)	113.5 (4.47)	131 (5.16)	2	35 (1.378)	35 (1.378)
75	60 (2.36)	6	1	156.5 (6.16)	154.5 (6.08)	172 (6.77)	3	60 (2.362)	60 (2.362)
100	70 (2.76)	6	2	197.5 (7.78)	195.5 (7.70)	213 (8.39)	4	70 (2.756)	76 (2.992)
125	75 (2.95)	8	3	253.5 (9.98)	251.5 (9.90)	269 (10.59)	5	75 (2.953)	75 (2.953)
150	80 (3.15)	8	3	270.5 (10.65)	268.5 (10.57)	286 (11.26)	6	80 (3.150)	80 (3.150)

TBA Cylinder: 32mm Bore

Dimensions mm (inch)

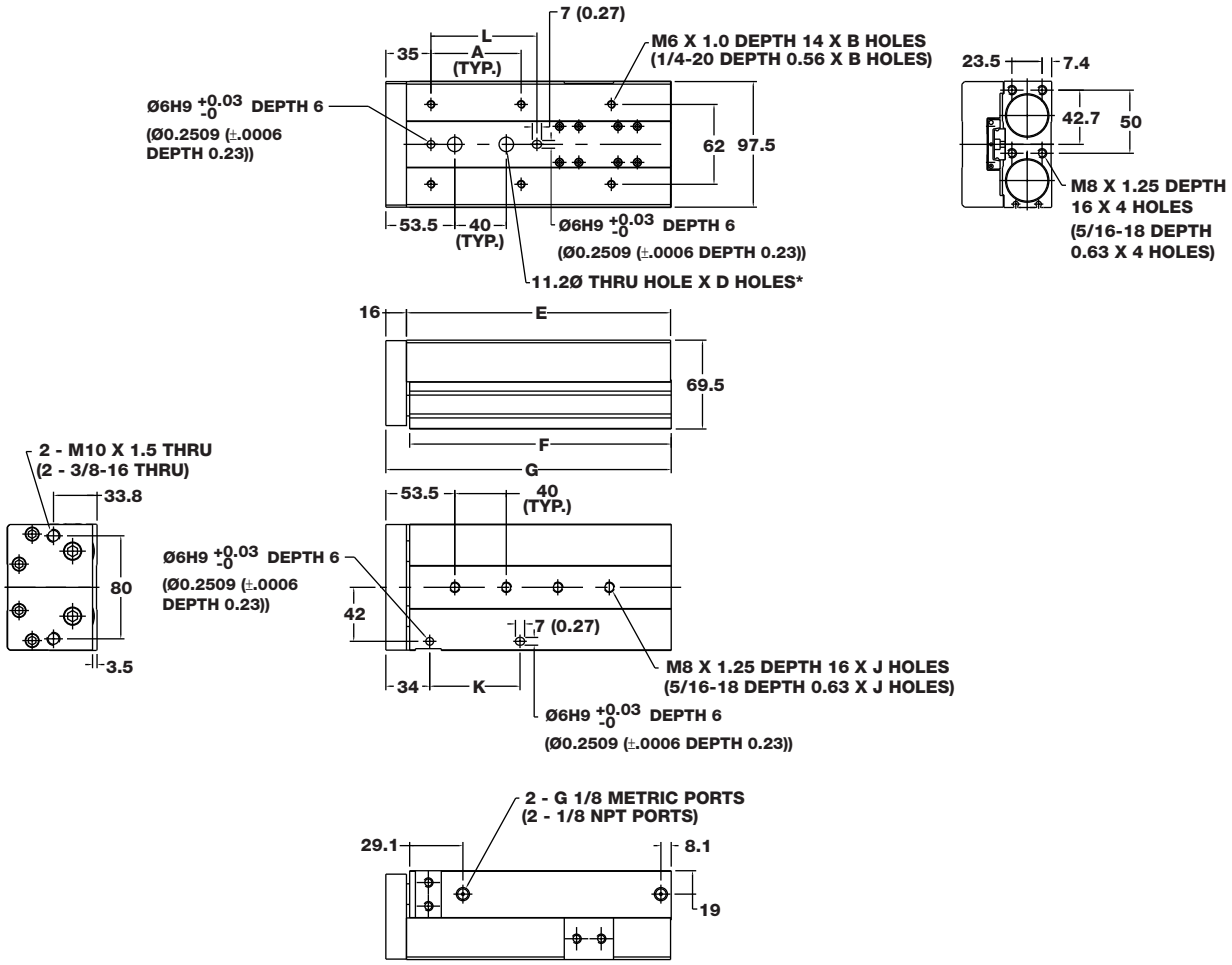

*Thru holes go through table top to access smaller counterbored mounting holes in the cylinder body.

Stroke	A	B	D	E	F	G	J	K	L
10	50 (1.97)	4	NA	102 (4.02)	100 (3.94)	119 (4.67)	2	50 (1.968)	50 (1.968)
20	50 (1.97)	4	NA	102 (4.02)	100 (3.94)	119 (4.67)	2	50 (1.968)	50 (1.968)
30	50 (1.97)	4	NA	102 (4.02)	100 (3.94)	119 (4.67)	2	50 (1.968)	50 (1.968)
40	60 (2.36)	4	1	112 (4.41)	110 (4.34)	129 (5.06)	2	60 (2.362)	60 (2.362)
50	35 (1.38)	6	1	125 (4.93)	123 (4.85)	142 (5.58)	2	35 (1.378)	35 (1.378)
75	60 (2.36)	6	1	171 (6.73)	169 (6.66)	188 (7.39)	3	60 (2.362)	60 (2.362)
100	70 (2.76)	6	2	207 (8.15)	205 (8.08)	224 (8.80)	4	70 (2.756)	76 (2.992)
125	75 (2.95)	8	3	265 (10.44)	263 (10.36)	282 (11.09)	5	75 (2.953)	75 (2.953)
150	80 (3.15)	8	3	298 (11.74)	296 (11.66)	315 (12.39)	6	80 (3.150)	80 (3.150)

Engineering Specifications

Twin Bore Air Table (Model TBA)

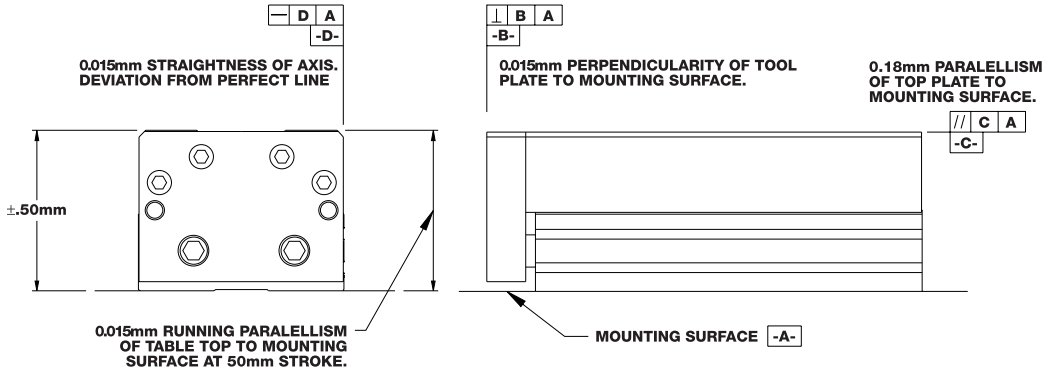

Engineering Specifications

Operating Medium:	Air
Maximum Operating Pressure:	10 bar (140 psi)
Temperature Range:	-10° to 70°C (15° to 160°F)
Lubrication:	PTFE Grease
Expected Service Life:	2500 kilometers (1500 miles)*

*For filtered, lubricated air, no-load conditions; if unlubricated, life is approximately 1/3.

Twin Bore Style

(Model TB; Standard Bearings and Option X)
Maximum Radial Load kg-Force (lb)

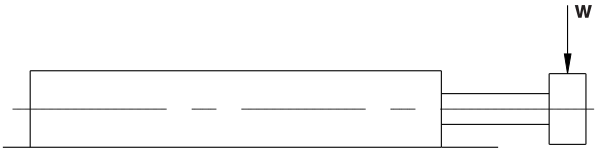

Maximum allowable load for horizontally mounted cylinder with rods aligned in horizontal direction.

TB Standard Maximum Radial Loads Kgf (lb)														
Model No.	10		20		30		40		50		75		100	
TB-6	0.15	(0.33)	0.12	(0.26)	0.10	(0.21)	0.08	(0.18)	0.07	(0.16)	N/A	N/A	N/A	N/A
TB-8	0.14	(0.31)	0.11	(0.24)	0.09	(0.20)	0.08	(0.17)	0.07	(0.15)	0.05	(0.11)	N/A	N/A
TB-12	1.0	(2.14)	0.8	(1.77)	0.7	(1.51)	0.6	(1.31)	0.5	(1.16)	0.4	(0.90)	N/A	N/A
TB-16	1.5	(3.31)	1.3	(2.80)	1.1	(2.42)	1.0	(2.14)	0.9	(1.91)	0.7	(1.51)	0.6	(1.25)
TB-20	2.3	(5.07)	2.0	(4.36)	1.7	(3.83)	1.6	(3.41)	1.4	(3.07)	1.1	(2.47)	0.9	(2.06)
TB-25	3.1	(6.76)	2.7	(5.85)	2.3	(5.15)	2.1	(4.60)	1.9	(4.16)	1.5	(3.35)	1.3	(2.81)
TB-32	5.8	(12.82)	5.1	(11.30)	4.6	(10.10)	4.2	(9.13)	3.8	(8.33)	3.1	(6.84)	2.6	(5.80)

TB-X Maximum Radial Loads Kgf (lb)														
Model No.	10		20		30		40		50		75		100	
TB-12-X	0.7	(1.50)	0.6	(1.28)	0.5	(1.11)	0.4	(0.98)	0.4	(0.88)	0.3	(0.70)	N/A	N/A
TB-16-X	0.9	(2.08)	0.8	(1.80)	0.7	(1.58)	0.6	(1.42)	0.6	(1.28)	0.5	(1.03)	0.4	(0.86)
TB-20-X	1.4	(3.06)	1.2	(2.69)	1.1	(2.41)	1.0	(2.17)	0.9	(1.98)	0.7	(1.63)	0.6	(1.38)
TB-25-X	1.5	(3.36)	1.4	(2.97)	1.2	(2.67)	1.1	(2.42)	1.0	(2.21)	0.8	(1.82)	0.7	(1.55)
TB-32-X	2.7	(5.97)	2.4	(5.35)	2.2	(4.85)	2.0	(4.43)	1.9	(4.08)	1.6	(3.41)	1.3	(2.93)

Engineering Specifications

(Model TB; Standard Bearings and Option X) Maximum Radial Load kg-Force (lb) Non-Rotational Accuracy (degrees)

Maximum allowable value for Ø° in a free unloaded condition.

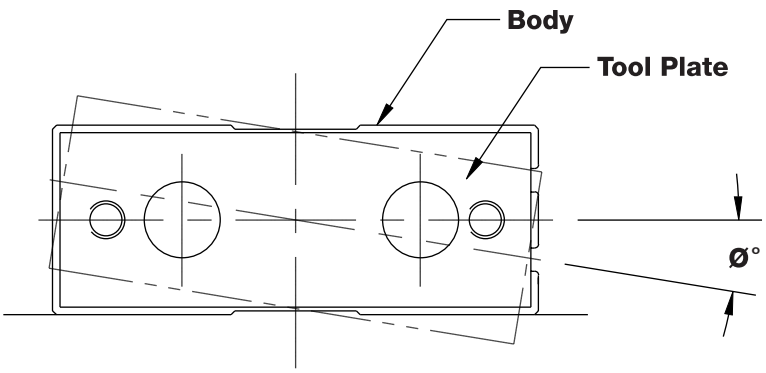

TB Model (Standard Bushings)	
Model No.	**Degrees (±)**
TB-6	0.15
TB-8	0.12
TB-12	0.10
TB-16	0.08
TB-20	0.08
TB-25	0.06
TB-32	0.05
TB Model - X Option (Ball Bushing)	
Model No.	**Degrees (±)**
TB-12	0.02
TB-16	0.02
TB-20	0.02
TB-25	0.01
TB-32	0.01

(Model TB; Standard Bearings and Option X) Maximum End Play mm (inch)

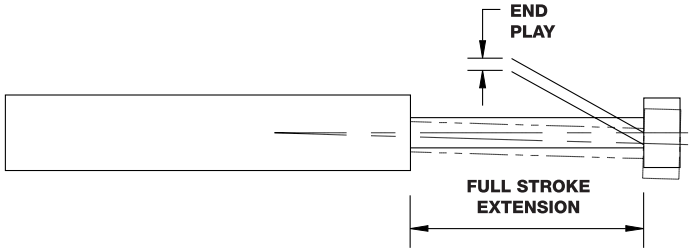

Maximum allowable movement of the tooling plate in the vertical direction with rods aligned in horizontal direction.

TB Model														
Model No.	**Stroke Length mm**													
(Standard Bushings	**10**		**20**		**30**		**40**		**50**		**75**		**100**	
TB-6	0.243	(0.010)	0.327	(0.013)	0.410	(0.016)	0.494	(0.019)	0.577	(0.023)	N/A	N/A	N/A	N/A
TB-8	0.255	(0.010)	0.343	(0.013)	0.431	(0.017)	0.519	(0.020)	0.607	(0.024)	0.828	(0.033)	N/A	N/A
TB-12	0.224	(0.009)	0.283	(0.011)	0.341	(0.013)	0.400	(0.016)	0.458	(0.018)	0.604	(0.024)	0.750	(0.030)
TB-16	0.229	(0.009)	0.283	(0.011)	0.337	(0.013)	0.391	(0.015)	0.445	(0.018)	0.581	(0.023)	0.716	(0.028)
TB-20	0.252	(0.010)	0.305	(0.012)	0.359	(0.014)	0.412	(0.016)	0.466	(0.018)	0.600	(0.024)	0.734	(0.029)
TB-25	0.231	(0.009)	0.278	(0.011)	0.325	(0.013)	0.372	(0.015)	0.420	(0.017)	0.537	(0.021)	0.655	(0.026)
TB-32	0.224	(0.009)	0.260	(0.010)	0.297	(0.012)	0.334	(0.013)	0.370	(0.015)	0.462	(0.018)	0.553	(0.022)

(Option X - Ball Bushing)	**Stroke Length mm**													
	10		**20**		**30**		**40**		**50**		**75**		**100**	
TB-12-X	0.143	(0.006)	0.185	(0.007)	0.228	(0.009)	0.271	(0.011)	0.313	(0.012)	0.420	(0.017)	0.526	(0.021)
TB-16-X	0.140	(0.006)	0.178	(0.007)	0.216	(0.008)	0.254	(0.010)	0.291	(0.011)	0.386	(0.015)	0.480	(0.019)
TB-20-X	0.133	(0.005)	0.165	(0.006)	0.197	(0.008)	0.229	(0.009)	0.260	(0.010)	0.340	(0.013)	0.419	(0.017)
TB-25-X	0.154	(0.006)	0.190	(0.007)	0.225	(0.009)	0.261	(0.010)	0.296	(0.012)	0.385	(0.015)	0.474	(0.019)
TB-32-X	0.156	(0.006)	0.185	(0.007)	0.214	(0.008)	0.243	(0.010)	0.273	(0.011)	0.346	(0.014)	0.419	(0.016)

Engineering Specifications

(Model TBD; Standard Bearings and Option X) Maximum End Play mm (inch)

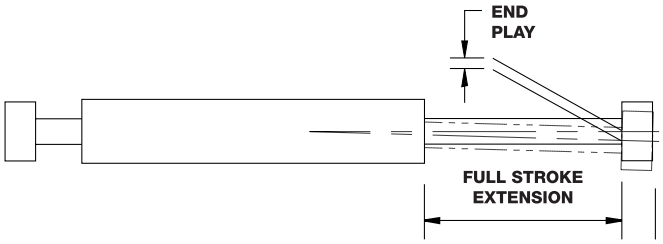

Maximum allowable movement of the tooling plate in the vertical direction with rods aligned in horizontal direction.

TBD Model							
Model No.	Stroke Length mm						
(Standard Bushings	10	20	30	40	50	75	100
TB-6	0.076 (0.003)	0.089 (0.003)	0.098 (0.004)	0.106 (0.004)	0.112 (0.004)	N/A N/A	N/A N/A
TB-8	0.068 (0.003)	0.080 (0.003)	0.088 (0.003)	0.095 (0.004)	0.101 (0.004)	0.111 (0.004)	N/A N/A
TB-12	0.063 (0.002)	0.071 (0.003)	0.077 (0.003)	0.082 (0.003)	0.086 (0.003)	0.094 (0.004)	0.100 (0.004)
TB-16	0.068 (0.003)	0.075 (0.003)	0.081 (0.003)	0.086 (0.003)	0.091 (0.004)	0.099 (0.004)	0.105 (0.004)
TB-20	0.074 (0.003)	0.082 (0.003)	0.088 (0.003)	0.094 (0.004)	0.099 (0.004)	0.108 (0.004)	0.115 (0.005)
TB-25	0.069 (0.003)	0.076 (0.003)	0.082 (0.003)	0.087 (0.003)	0.092 (0.004)	0.101 (0.004)	0.107 (0.004)
TB-32	0.078 (0.003)	0.084 (0.003)	0.089 (0.003)	0.093 (0.004)	0.097 (0.004)	0.104 (0.004)	0.110 (0.004)

(Option X - Ball Bushing)	Stroke Length mm						
	10	20	30	40	50	75	100
TB-12-X	0.007 (0.0003)	0.008 (0.0003)	0.009 (0.0003)	0.009 (0.0004)	0.010 (0.0004)	0.011 (0.0004)	0.012 (0.0005)
TB-16-X	0.006 (0.0002)	0.006 (0.0002)	0.007 (0.0003)	0.007 (0.0003)	0.008 (0.0003)	0.009 (0.0003)	0.009 (0.0004)
TB-20-X	0.008 (0.0003)	0.009 (0.0004)	0.010 (0.0004)	0.011 (0.0004)	0.012 (0.0005)	0.013 (0.0005)	0.014 (0.0005)
TB-25-X	0.009 (0.0004)	0.010 (0.0004)	0.011 (0.0004)	0.012 (0.0005)	0.013 (0.0005)	0.014 (0.0006)	0.015 (0.0006)
TB-32-X	0.010 (0.0004)	0.010 (0.0004)	0.011 (0.0004)	0.012 (0.0005)	0.013 (0.0005)	0.014 (0.0005)	0.015 (0.0006)

Engineering Specifications

Twin Bore, Double-End Style (Model TBD; Standard Bearings and Option X) Maximum Radial Load kg-Force (lb)

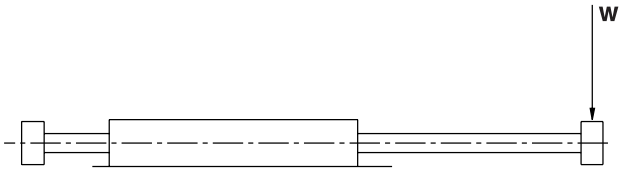

Maximum allowable load for horizontally mounted Double Rod End cylinder with rods aligned in horizontal direction.

TBD Standard Maximum Radial Loads Kgf (lb)														
Model No.	**10**		**20**		**30**		**40**		**50**		**75**		**100**	
TBD-6	0.83	(1.83)	0.79	(1.75)	0.77	(1.69)	0.75	(1.65)	0.73	(1.62)	N/A	N/A	N/A	N/A
TBD-8	0.90	(1.98)	0.86	(1.90)	0.84	(1.84)	0.82	(1.80)	0.81	(1.77)	0.78	(1.72)	N/A	N/A
TBD-12	1.5	(3.35)	1.5	(3.27)	1.5	(3.22)	1.4	(3.18)	1.4	(3.15)	1.4	(3.09)	N/A	N/A
TBD-16	2.3	(4.97)	2.2	(4.89)	2.2	(4.83)	2.2	(4.79)	2.2	(4.76)	2.1	(4.70)	2.1	(4.66)
TBD-20	3.3	(7.29)	3.3	(7.19)	3.2	(7.11)	3.2	(7.05)	3.2	(7.01)	3.1	(6.92)	3.1	(6.86)
TBD-25	4.3	(9.46)	4.2	(9.33)	4.2	(9.22)	4.2	(9.14)	4.1	(9.07)	4.1	(8.95)	4.0	(8.87)
TBD-32	7.5	(16.44)	7.4	(16.21)	7.3	(16.02)	7.2	(15.88)	7.2	(15.76)	7.1	(15.53)	7.0	(15.37)

TBD-X Maximum Radial Loads Kgf (lb)														
Model No.	**10**		**20**		**30**		**40**		**50**		**75**		**100**	
TBD-12-X	12.1	(26.70)	11.9	(26.09)	11.7	(25.65)	11.5	(25.33)	11.4	(25.08)	11.2	(24.64)	N/A	N/A
TBD-16-X	15.0	(33.04)	14.8	(32.51)	14.6	(32.13)	14.5	(31.84)	14.4	(31.61)	14.2	(31.20)	14.1	(30.94)
TBD-20-X	21.1	(46.37)	20.8	(45.71)	20.6	(45.22)	20.4	(44.84)	20.2	(44.54)	20.0	(43.99)	19.8	(43.62)
TBD-25-X	23.5	(51.64)	23.1	(50.89)	22.9	(50.32)	22.7	(49.87)	22.5	(49.51)	22.2	(48.86)	22.0	(48.42)
TBD-32-X	44.7	(98.38)	44.1	(96.98)	43.6	(95.89)	43.2	(95.01)	42.9	(94.29)	42.2	(92.94)	41.8	(92.01)

Non-Rotational Accuracy (degrees)

Maximum allowable value for Ø° in a free unloaded condition.

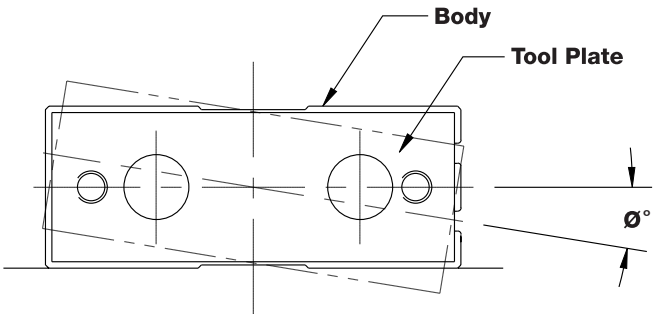

TBD Model (Standard Bushings)	
Model No.	**Degrees (±)**
TBD-6	0.15
TBD-8	0.12
TBD-12	0.10
TBD-16	0.08
TBD-20	0.08
TBD-25	0.06
TBD-32	0.05
TBD Model - X Option (Ball Bushing)	
Model No.	**Degrees (±)**
TBD-12	0.02
TBD-16	0.02
TBD-20	0.02
TBD-25	0.01
TBD-32	0.01

Engineering Specifications

Twin Bore Air Table (Model TBA)

Table deflection by pitch moment

Table pitch deflection due to static pitch moment applied at arrow for fully extended stroke of slide table.

TBA-6

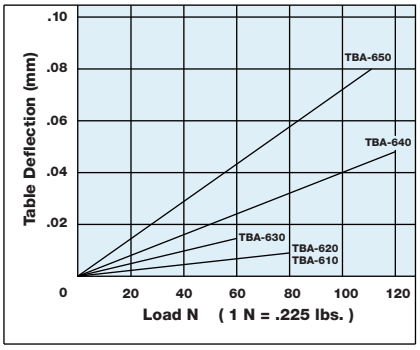

TBA-8

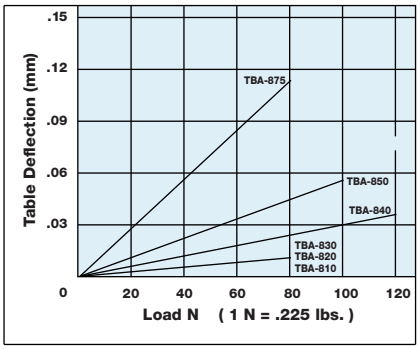

TBA-12

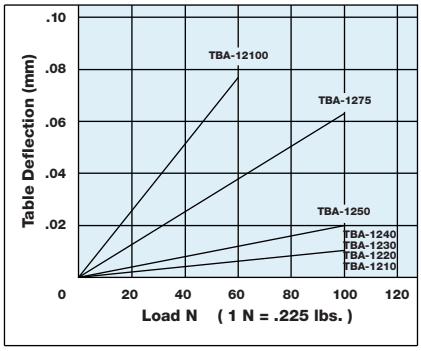

TBA-16

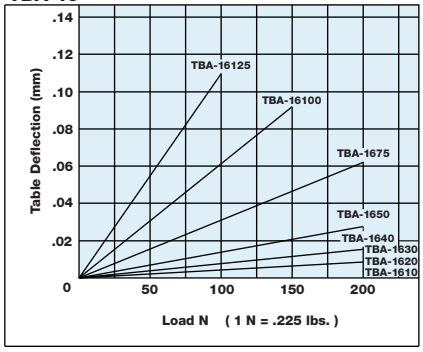

TBA-20

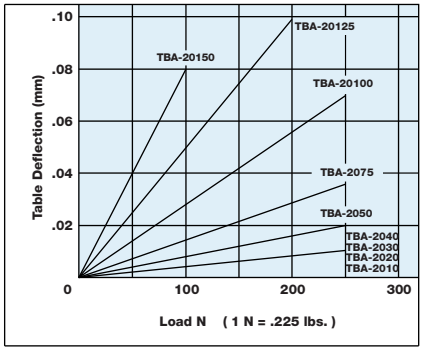

TBA-25

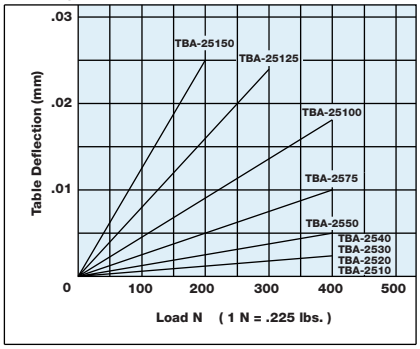

TBA-32

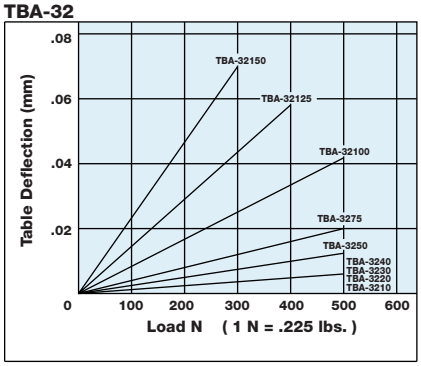

Engineering Specifications

Twin Bore Air Table (Model TBA)

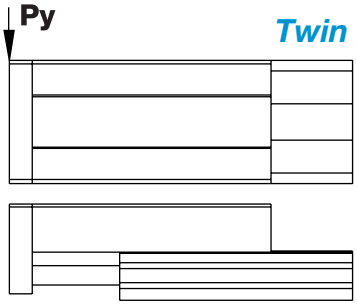

Table deflection by yaw moment

Table yaw deflection due to static yaw moment applied at arrow for fully extended stroke of slide table.

TBA-6

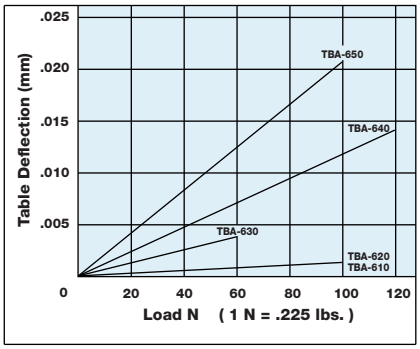

TBA-8

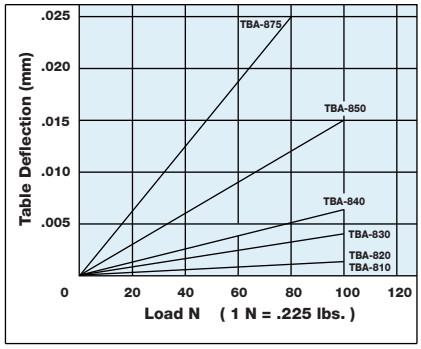

TBA-12

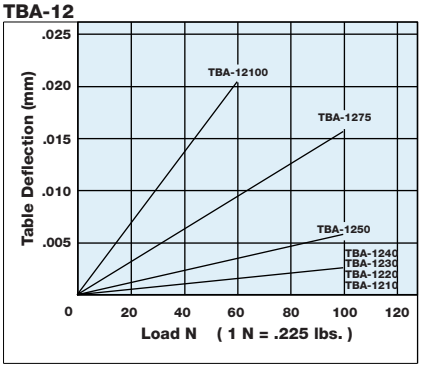

TBA-16

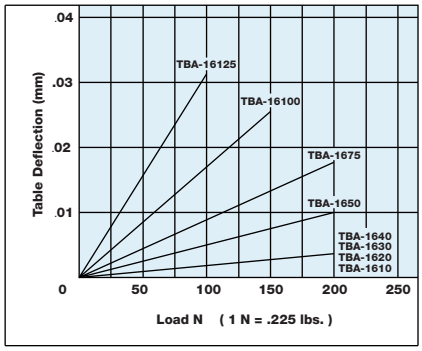

TBA-20

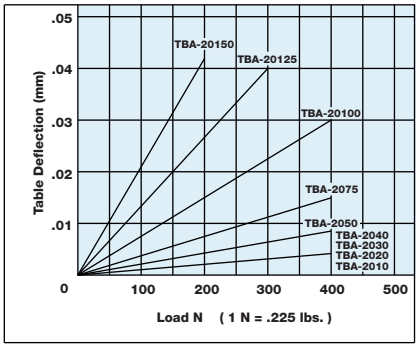

TBA-25

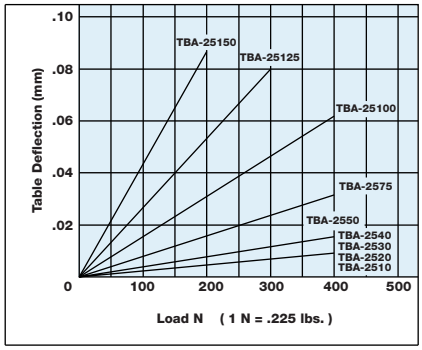

TBA-32

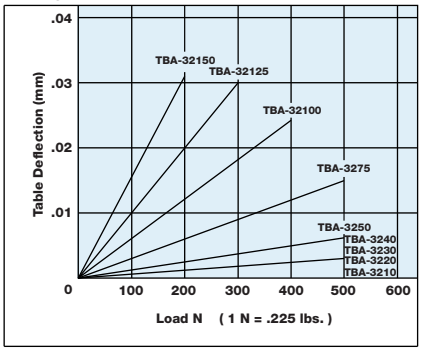

Engineering Specifications

Twin Bore Air Table (Model TBA)

Formula for calculation of allowable static load Pp, Py and Pr

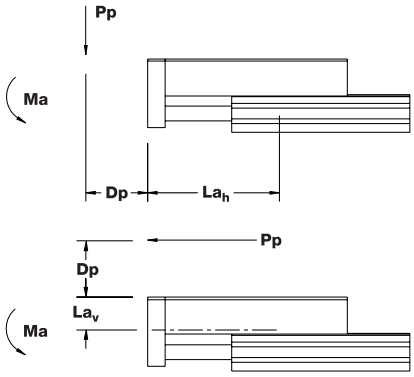

$$Pp = \frac{Ma \times 1000}{Dp + La} \text{ (Newtons)}$$

Dp = Distance from load point to body (mm).

La = Moment arm (mm) see chart.

Ma (Pitching Moment)

Model \ Stroke (mm)	Maximum Allowable Moment (Nm)								
	10	20	30	40	50	75	100	125	150
TBA-6	2.55	2.55	2.55	8.65	8.65	N/A	N/A	N/A	N/A
TBA-8	2.55	2.55	2.55	8.65	8.65	8.65	N/A	N/A	N/A
TBA-12	5.39	5.39	5.39	5.39	5.39	14.1	14.1	N/A	N/A
TBA-16	8.72	8.72	8.72	8.72	31.5	31.5	31.5	31.5	N/A
TBA-20	31.5	31.5	31.5	31.5	31.5	31.5	42.1	42.1	42.1
TBA-25	44.9	44.9	44.9	44.9	44.9	44.9	72.2	72.2	72.2
TBA-32	44.9	44.9	44.9	44.9	44.9	120	120	120	120

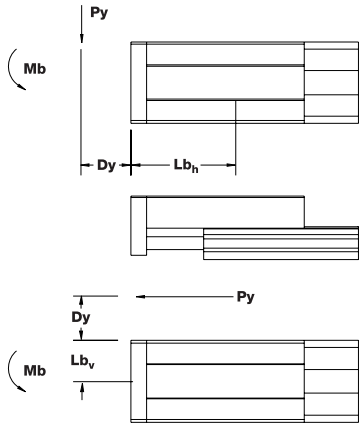

$$Py = \frac{Mb \times 1000}{Dy + Lb} \text{ (Newtons)}$$

Dy = Distance from load point to body (mm).

Lb = Moment arm (mm) see chart.

Mb (Yawing Moment)

Model \ Stroke (mm)	Maximum Allowable Moment (Nm)								
	10	20	30	40	50	75	100	125	150
TBA-6	2.55	2.55	2.55	8.65	8.65	N/A	N/A	N/A	N/A
TBA-8	2.55	2.55	2.55	8.65	8.65	8.65	N/A	N/A	N/A
TBA-12	5.39	5.39	5.39	5.39	5.39	14.1	14.1	N/A	N/A
TBA-16	8.72	8.72	8.72	8.72	31.5	31.5	31.5	31.5	N/A
TBA-20	31.5	31.5	31.5	31.5	31.5	31.5	42.1	42.1	42.1
TBA-25	44.9	44.9	44.9	44.9	44.9	44.9	72.2	72.2	72.2
TBA-32	44.9	44.9	44.9	44.9	44.9	120	120	120	120

Engineering Specifications

Twin Bore Air Table (Model TBA)

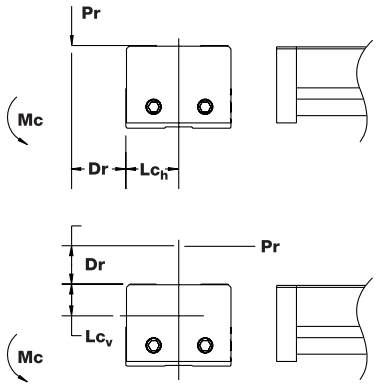

$$Pr = \frac{Mc \times 1000}{Dr + Lc} \text{ (Newtons)}$$

Dr = Distance from load point to body (mm).

Lc = Moment arm (mm) see chart.

Mc (Rolling Moment)

Model \ Stroke (mm)	Maximum Allowable Moment (Nm)								
	10	20	30	40	50	75	100	125	150
TBA-6	5.1	5.1	5.1	13.1	13.1	N/A	N/A	N/A	N/A
TBA-8	5.1	5.1	5.1	13.1	13.1	13.1	N/A	N/A	N/A
TBA-12	15.2	15.2	15.2	15.2	15.2	22.8	22.8	N/A	N/A
TBA-16	22.8	22.8	22.8	22.8	38.1	38.1	38.1	38.1	N/A
TBA-20	46.2	46.2	46.2	46.2	46.2	46.2	46.2	46.2	46.2
TBA-25	66.5	66.5	66.5	66.5	66.5	66.5	77.7	77.7	77.7
TBA-32	75.7	75.7	75.7	75.7	75.7	91.2	91.2	91.2	91.2

Bore/Stroke Constants

Model \ Stroke (mm)	Lah and Lbh Moment Lever Arm (mm)								
	10	20	30	40	50	75	100	125	150
TBA-6	30.5	40.5	50.4	71.6	81.6	N/A	N/A	N/A	N/A
TBA-8	30.5	41	51	72.8	83.1	108.1	N/A	N/A	N/A
TBA-12	58	58	58	68	78	120	145	N/A	N/A
TBA-16	63.5	63.5	63.5	73.5	89.5	114.5	139.5	164.5	N/A
TBA-20	70.5	70.5	70.5	80.5	92.5	117.5	157	182	207
TBA-25	77	77	77	87.5	98.5	124.5	165	190	215
TBA-32	79	79	79	89	99	139.5	165.5	190.5	215

Model	Moment Lever Arm Distances (mm)			
	La_v	Lb_v	Lc_h	Lc_v
TBA-6	9.1	15.7	15.7	9.1
TBA-8	9.1	18.6	18.6	9.1
TBA-12	12.5	23	23	12.5
TBA-16	15.5	28.5	28.5	15.5
TBA-20	20.5	32	32	20.5
TBA-25	22.5	40	40	22.5
TBA-32	27	49	49	27

Note: 1 N-m = 8.851 in-lb
1N-m = .7376 ft-lb

Theoretical Cylinder Forces

Force = Power Factor x Input Pressure

Bore	Direction	Power Factor (When input pressure in bar)	Power Factor (When input pressure in psi)
6mm	Extend*	0.57	0.09
	Retract	0.42	0.07
8mm	Extend*	1.00	0.16
	Retract	0.75	0.12
12mm	Extend*	2.2	0.4
	Retract	1.6	0.2
16mm	Extend*	4.0	0.6
	Retract	3.0	0.4
20mm	Extend*	6.2	1.0
	Retract	4.8	0.8
25mm	Extend*	9.8	1.6
	Retract	7.6	1.2
32mm	Extend*	16.0	2.4
	Retract	12.0	1.8

**For TBD models use Retract Power Factors only; Extend is not applicable.*
BAR x Power Factor = kg
PSI x Power Factor = Pounds

Weights

TB Cylinder

Bore	Approx. Base Wt. of Cylinder gf (oz.)		Wt. Added Per 5mm of Stk gf (oz.)	
6	52.3	(1.85)	4.9	(0.17)
8	75.5	(2.66)	6.5	(0.23)
12	127.4	(4.5)	9.4	(0.3)
16	212.6	(7.5)	13.6	(0.4)
20	345.6	(12.1)	19.1	(0.6)
25	551.8	(19.4)	28.0	(0.9)
32	1046.5	(36.9)	44.4	(1.5)

TBD Cylinder

Bore	Approx. Base Wt. of Cylinder gf (oz.)		Wt. Added Per 5mm of Stk gf (oz.)	
6	81.8	(2.89)	5.5	(0.19)
8	109.7	(3.87)	7.4	(0.26)
12	208.7	(7.3)	11.6	(0.4)
16	361.3	(12.7)	17.6	(0.6)
20	580.9	(20.4)	25.3	(0.8)
25	943.1	(33.2)	36.9	(1.3)
32	1835.6	(64.7)	60.1	(2.1)

TBA Cylinder

Bore	Weight of Cylinder Based on Stroke Length gf (oz.)									
	10mm		20mm		30mm		40mm		50mm	
6	119.6	(4.22)	139.4	(4.92)	158.6	(5.60)	219.8	(7.75)	240.5	(8.48)
8	159.8	(5.64)	178.5	(6.30)	202.9	(7.16)	267.2	(9.42)	295.0	(10.41)
12	236.0	(8.3)	240.4	(8.4)	244.9	(8.6)	283.0	(9.9)	342.0	(12.0)
16	378.7	(13.3)	386.5	(13.6)	394.4	(13.9)	433.1	(15.2)	561.4	(19.8)
20	631.4	(22.2)	643.7	(22.7)	656.0	(23.1)	728.0	(25.6)	827.9	(29.2)
25	992.5	(35.0)	1010.2	(35.6)	1027.9	(36.2)	1128.3	(39.8)	1253.4	(44.2)
32	1660.0	(58.5)	1691.6	(59.6)	1723.1	(60.7)	1882.1	(66.3)	2078.8	(73.3)

TBA Cylinder

Bore	Weight of Cylinder Based on Stroke Length gf (oz.)							
	75mm		100mm		125mm		150mm	
6	N/A		N/A		N/A		N/A	
8	391.0	(13.79)	N/A		N/A		N/A	
12	479.9	(16.9)	616.9	(21.7)	N/A		N/A	
16	699.8	(24.6)	821.7	(28.9)	984.5	(34.7)	N/A	
20	1047.4	(36.9)	1438.4	(50.7)	1645.0	(58.0)	1872.4	(66.0)
25	1636.0	(57.7)	2019.1	(71.2)	2525.8	(89.1)	2710.5	(95.6)
32	2741.4	(96.7)	3277.9	(115.6)	4093.6	(144.4)	4591.6	(161.9)

Twin Bore Repair Kits

Each TB and TBD repair kit includes the appropriate number cup seals, rod wiper seals, rod seals, and rod guides. The TBA kits include the bumper in addition to the seals. Repair kits are not available on 6mm and 8mm.

To order, please insert the bore code after the model designation for the desired repair kit. Suffix after bore code indicates seal and ball bushing options.

For Twin Bore cylinders prior to May, 2003, use the same part number except the prefix is designated as K (e.g., K-B-TB-12).

Repair Kit
K2-B-TB-__
K2-B-TB-__-V
K2-B-TBD-__
K2-B-TBD-__-V
K2-B-TB-__-X
K2-B-TB-__-VX
K2-B-TBD-__-X
K2-B-TBD-__-VX
K2-B-TBA-__
K2-B-TBA-__-V

Twin Bore

Standard Model 6mm - 8mm Bore

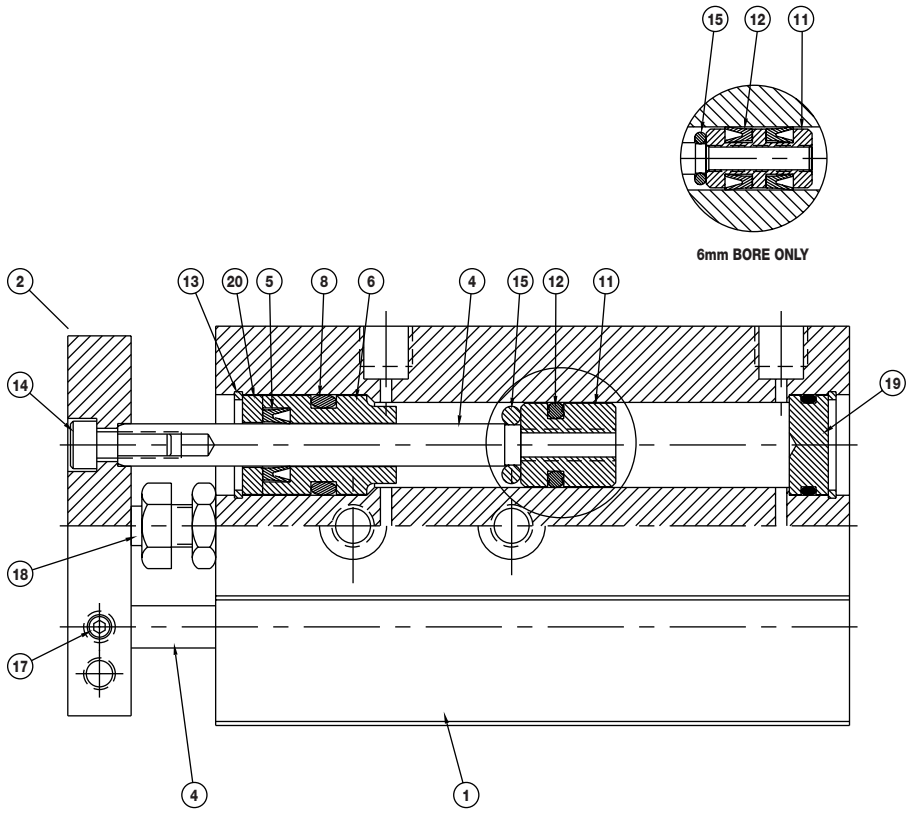

Part #	Description	Material
1	Body	Aluminum - (Anodized over wear surfaces)
2	End Block	Anodized Aluminum
4	Rod	Hard Chrome Plated Carbon Steel
5	Rod Seal	Nitrile
6	Rod Guide	White Delrin®
8	Rod Guide Seal	Nitrile
11	Piston	Aluminum
12	Piston Seal	Nitrile
13	Snap Ring	Zinc Plated Carbon Steel
14	Socket Head Cap Screw	Zinc Plated Carbon Steel
15	Bumper	Urethane
17	Socket Head Set Screw	Zinc Plated Carbon Steel
18	Stroke Adjuster/Bumper	Stainless Bolt with Urethane Bumper
19	Rear Head	Anodized Aluminum
20	Rod Seal Retainer	Stainless Steel

Note: Field repair requires special assembly tooling and may not be practical. Factory rework is recommended.

Twin Bore

TBD (Double Rod End) 6mm - 8mm Bore

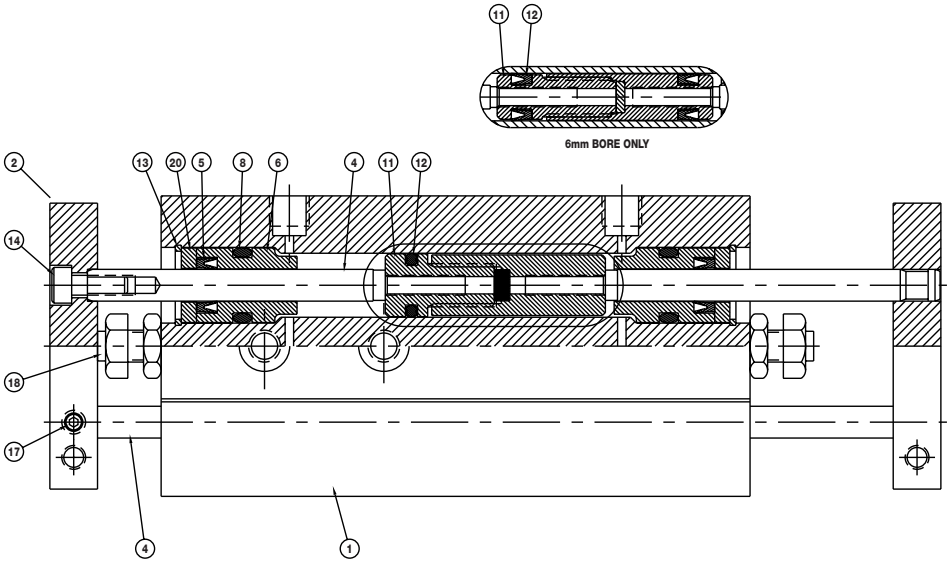

Part #	Description	Material
1	Body	Aluminum - (Anodized over wear surfaces)
2	End Block	Anodized Aluminum
4	Rod	Hard Chrome Plated Carbon Steel
5	Rod Seal	Nitrile
6	Rod Guide	White Delrin®
8	Rod Guide Seal	Nitrile
11	Piston	Aluminum
12	Piston Seal	Nitrile
13	Snap Ring	Zinc Plated Carbon Steel
14	Socket Head Cap Screw	Zinc Plated Carbon Steel
17	Socket Head Set Screw	Zinc Plated Carbon Steel
18	Stroke Adjuster/Bumper	Stainless Bolt with Urethane Bumper
20	Rod Seal Retainer	Stainless Steel

Twin Bore

TBA (Air Table Model) 6mm - 8mm Bore

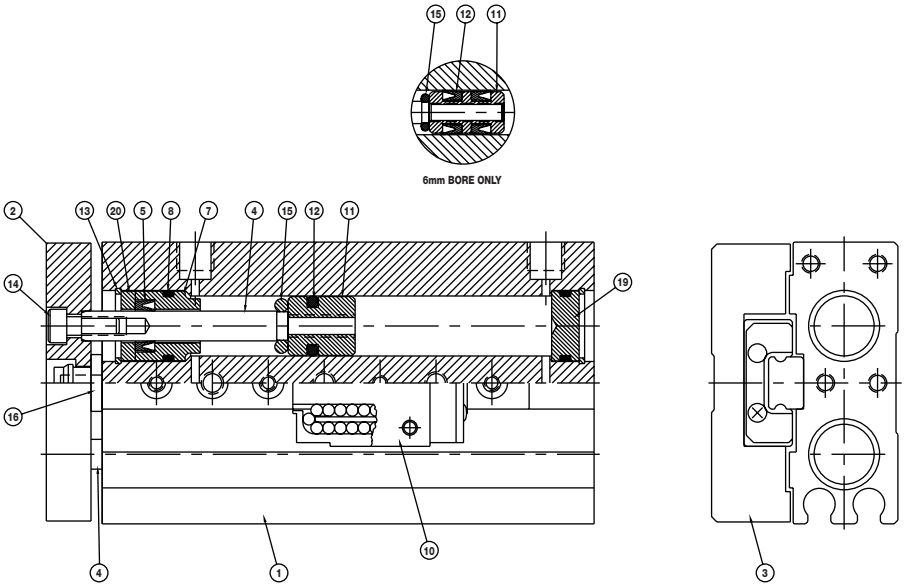

Part #	Description	Material
1	Body	Aluminum - (Anodized over wear surfaces)
2	End Block	Anodized Aluminum
3	Table Plate	Anodized Aluminum
4	Rod	Hard Chrome Plated Carbon Steel
5	Rod Seal	Nitrile
7	Rod Guide	Anodized Aluminum
8	Rod Guide Seal	Nitrile
10	Table Bearing	Stainless Steel Rail + Stainless Steel Bearings
11	Piston	Aluminum
12	Piston Seal	Nitrile
13	Snap Ring	Zinc Plated Carbon Steel
14	Socket Head Cap Screw	Zinc Plated Carbon Steel
15	Bumper	Urethane
19	Rear Head	Anodized Aluminum
20	Rod Seal Retainer	Stainless Steel

Twin Bore

12mm - 32mm Bore

Standard Model

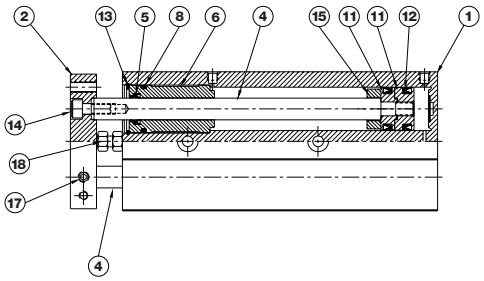

Ball Bearing Model (Option X)

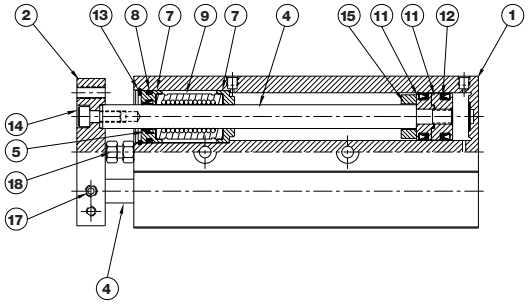

Part List

Part #	Description	Material
1	Body	Aluminum - (Anodized over wear surfaces)
2	End Block	Anodized Aluminum
4	Rod	Hard Chrome Plated Carbon Steel
5	Rod Seal/Wiper	Nitrile (Standard) or Fluoroelastomer (High Temperature Option)
6	Rod Guide	White Delrin®
7	Rod Guide	Anodized Aluminum
8	Rod Guide Seal	Nitrile (Standard) or Fluoroelastomer (High Temperature Option)
9	Ball Bushing	Stainless Steel
11	Piston	Aluminum
12	Piston Seal	Nitrile (Standard) or Fluoroelastomer (High Temperature Option)
13	Snap Ring	Zinc Plated Carbon Steel
14	Socket Head Cap Screw	Zinc Plated Carbon Steel
15	Bumper	Urethane
17	Socket Head Set Screw	Zinc Plated Carbon Steel
18	Stroke Adjuster/Bumper	Stainless Bolt w/Urethane Bumper

Twin Bore

Air Table Model (TBA) 12mm - 32mm Bore

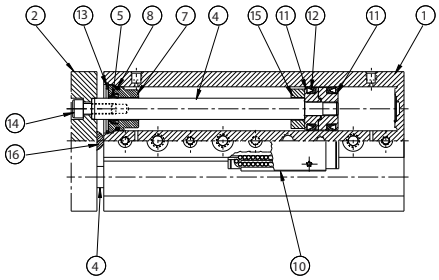

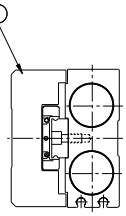

Part List

Part #	Description	Material
1	Body	Aluminum - (Anodized over wear surfaces)
2	End Block	Anodized Aluminum
3	Table Plate	Anodized Aluminum
4	Rod	Hard Chrome Plated Carbon Steel
5	Rod Seal/Wiper	Nitrile (Standard) or Fluoroelastomer (High Temperature Option)
7	Rod Guide	Anodized Aluminum
8	Rod Guide Seal	Nitrile (Standard) or Fluoroelastomer (High Temperature Option)
10	Table Bearing	Stainless Steel Rail + Stainless Steel Bearings
11	Piston	Aluminum
12	Piston Seal	Nitrile (Standard) or Fluoroelastomer (High Temperature Option)
13	Snap Ring	Zinc Plated Carbon Steel
14	Socket Head Cap Screw	Zinc Plated Carbon Steel
15	Bumper	Urethane
16	Bumper	Urethane

Twin Bore

TBD (Double Rod End) 12mm - 32mm Bore

Standard Model

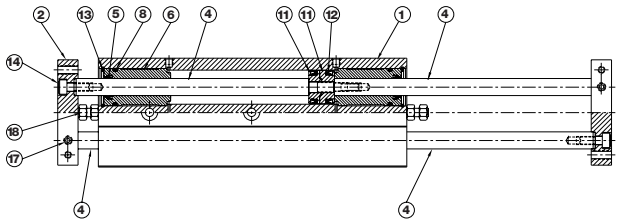

Ball Bearing Model (Option X)

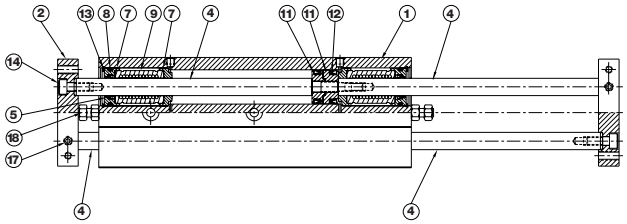

Part List

Part #	Description	Material
1	Body	Aluminum - (Anodized over wear surfaces)
2	End Block	Anodized Aluminum
4	Rod	Hard Chrome Plated Carbon Steel
5	Rod Seal/Wiper	Nitrile (Standard) or Fluoroelastomer (High Temperature Option)
6	Rod Guide	White Delrin®
7	Rod Guide	Anodized Aluminum
8	Rod Guide Seal	Nitrile (Standard) or Fluoroelastomer (High Temperature Option)
9	Ball Bushing	Stainless Steel
11	Piston	Aluminum
12	Piston Seal	Nitrile (Standard) or Fluoroelastomer (High Temperature Option)
13	Snap Ring	Zinc Plated Carbon Steel
14	Socket Head Cap Screw	Zinc Plated Carbon Steel
17	Socket Head Set Screw	Zinc Plated Carbon Steel
18	Stroke Adjuster/Bumper	Stainless Bolt w/Urethane Bumper

Options

Stroke Adjuster (Options A1, A2, A3)

Provides 5mm (.197) of stroke adjustment at the end of stroke.

(Option A1 shown)

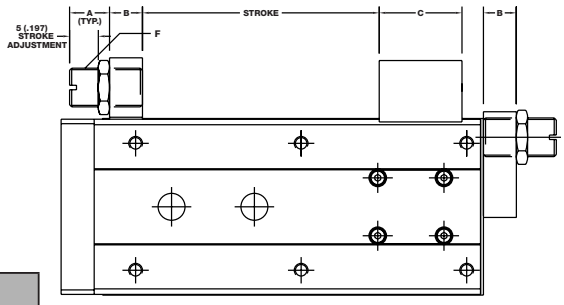

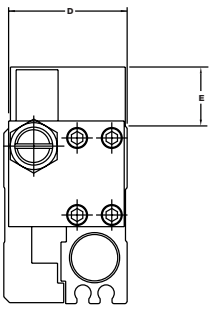

Bore	A	B	C	D	E	F
6	7.7 (0.30)	6 (0.24)	12.5 (0.49)	21.7 (0.85)	9 (0.35)	M5x0.8
8	8 (0.31)	6 (0.24)	14.3 (0.56)	24.6 (0.97)	12.2 (0.48)	M8x1
12	10 (.39)	8 (.31)	18.1 (.71)	30 (1.18)	17 (.67)	M10x1
16	10 (.39)	10 (.39)	21.1 (.83)	37.5 (1.48)	18 (.71)	M12x1
20	10 (.39)	12 (.47)	30 (1.18)	47.5 (1.87)	22 (.87)	M14x1
25	10 (.39)	16 (.63)	30 (1.18)	54.5 (2.15)	24.5 (.96)	M20x1.5
32	10 (.39)	16 (.63)	32 (1.26)	67.3 (2.65)	32.3 (1.27)	M25x1.5

Options

Side Mounting Holes (Option S)

Use for Models TB and TBD cylinders.

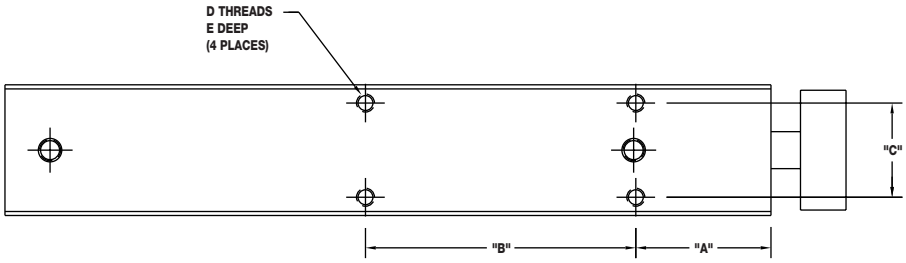

Bore	A	B	Stroke Length	C	D		E
					Standard	Option E	
6mm	10 (0.394)	23 (0.906)	0-10mm	6 (0.236)	M2x0.4	#2-56 UNC	3 (0.118)
		33 (1.299)	11-20mm				
		43 (1.693)	21-30mm				
		53 (2.087)	31-40mm				
		63 (2.480)	41-50mm				
8mm	10 (0.394)	23 (0.906)	0-10mm	7 (0.276)	M2.5x0.45	#3-48 UNC	3 (0.118)
		33 (1.299)	11-20mm				
		43 (1.693)	21-30mm				
		53 (2.087)	31-40mm				
		63 (2.480)	41-50mm				
		88 (3.465)	51-75mm				
12mm	20 (.787)	30 (1.181)	0-25mm	10 (.394)	M3x.5	#4-40 UNC	4.5 (.177)
		40 (1.575)	26-50mm				
		50 (1.969)	51-75mm				
16mm	30 (1.181)	25 (.984)	0-20mm	12 (.472)	M4x0.7	#8-32 UNC	4.5 (.177)
		35 (1.378)	21-50mm				
		45 (1.772)	51-80mm				
		55 (2.165)	81-100mm				
20mm	30 (1.181)	30 (1.181)	0-25mm	16 (.630)	M4x0.7	#8-32 UNC	4.5 (.177)
		40 (1.575)	26-50mm				
		60 (2.362)	51-100mm				
25mm	30 (1.181)	30 (1.181)	0-20mm	22 (.866)	M5x0.8	#10-32 UNF	7.4 (.290)
		40 (1.575)	21-50mm				
		60 (2.362)	51-80mm				
32mm	30 (1.181)	40 (1.575)	0-25mm	25 (.984)	M5x0.8	#10-32 UNF	7.5 (.295)
		50 (1.969)	26-50mm				
		70 (2.756)	51-100mm				

Options

Shock Absorbers (Option K)

Provides shock absorption at the ends of stroke. The shock absorbers are available in three dampening levels: light duty, standard duty, and heavy duty, so the shock can be selected based on the energies of the application. Shock absorbers can also be provided at either end of stroke or at both ends.

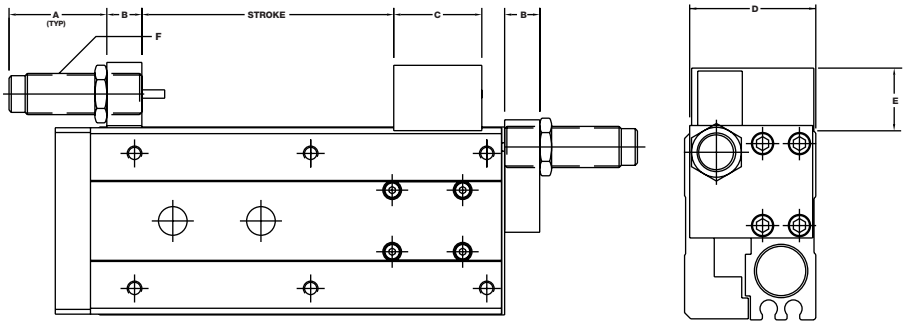

Bore	A	B	C	D	E	F
8	22.5 (0.89)	6 (0.24)	14.3 (0.56)	24.6 (0.97)	12.2 (0.48)	M8x1
12	20.7 (.81)	8 (.31)	18.1 (.71)	30 (1.18)	17 (.67)	M10x1
16	39.8 (1.57)	10 (.30)	21.1 (.83)	37.5 (1.48)	18 (.71)	M12x1
20	70.2 (2.76)	12 (.47)	30 (1.18)	47.5 (1.87)	22 (.87)	M14x1
25	82.7 (3.26)	16 (.63)	30 (1.18)	54.5 (2.15)	24.5 (.96)	M20x1.5
32	90.4 (3.56)	16 (.63)	32 (1.26)	67.3 (2.65)	32.3 (1.27)	M25x1.5

See the following section on how to size the shock absorber to a specific application. Shock absorbers within a given bore size have the same dimensions regardless of dampening strength.

How to Size The Shock Absorber

The shock absorber is pre selected for size by the bore diameter of the cylinder. However, the “dampening strength must be selected to choose the proper shock absorber”. To calculate the necessary shock, the following values must be known.

Cylinder Bore Diameter	d(mm)
Operating Pressure	p(bar)
Load on the Actuator	W(kg)
Impact Velocity	v(m / sec)
(impact velocity may be estimated at 2 times average velocity.)	
Weight Constant	k1
Cylinder Constant	k2
Shock Constant	k3
Cycles per Hour	c
Mounting Orientation (horizontal or vertical)	

Et (Total Energy) equals the sum of Ek (Kinetic Energy) and Ew (Work Energy). Note the “work Energy” calculation varies with mounting orientation, Ewh for horizontal and Ewv for “vertical” applications.

Ek = ((W/2) + k1) x v2 [Nm]

Ewh = k2 x p x k3 [Nm]

Ewv = ((k2 x p) + W + k1) x k3 [Nm]

Et = Ek + Ew [Nm]

EtC = Et x c [Nm / hr]

Et and EtC must not exceed maximum values listed below. Dampening must be chosen from graphs on page 2.114.

Options

Shock Specifications

Model Bore	Shock Bore (mm)	K_3 Shock Constant	Thread Size	E_t Max Nm per Cycle	E_tC Max Nm per Hour	Max Shock Force (N)	Max Propelling Force (N)	Shock Weight (g)
8	5.6	0.0051	M8x1	0.45	3954	N/A	N/A	9
12	7.1	0.006	M10x1.0	2.2	4100	700	89	12
16	6	0.010	M12x1.0	5.0	14125	1000	220	42
20	7	0.016	M14x1.0	21.5	34000	2225	530	71
25	11	0.022	M20x1.5	45.0	53700	3110	890	200
32	13	0.025	M25x1.5	73.5	70000	4440	1550	285

Weight Constant (k_1)

Stroke	Bore					
	8	12	16	20	25	32
10	0.08	0.17	0.29	0.51	0.82	1.34
20	0.10	0.17	0.29	0.52	0.84	1.38
30	0.12	0.17	0.30	0.53	0.86	1.41
40	0.15	0.20	0.33	0.58	0.92	1.51
50	0.20	0.23	0.42	0.64	0.99	1.63
75	0.22	0.32	0.50	0.78	1.22	2.05
100	N/A	0.40	0.57	1.02	1.46	2.38
125	N/A	N/A	0.67	1.15	1.76	2.86
150	N/A	N/A	N/A	1.29	1.88	3.17

Shock Graph Legend

Bore	Dampening		
	Light Duty	Std. Duty	Heavy Duty
8	LD-8	SD-8	N/A
12	LD-12	SD-12	HD-12
16	LD-16	SD-16	HD-16
20	LD-20	SD-20	HD-20
25	LD-25	SD-25	HD-25
32	LD-32	SD-32	HD-32
Order Code	1	2	3

Cylinder Constant (k_2)

Bore	k
8	10.06
12	22.62
16	40.22
20	62.84
25	98.19
32	160.87

Based on bore diameter, impact velocity (v), and calculated Total Energy (E_t), choose the LD, SD, or HD shock from the appropriate graph.

8mm Bore

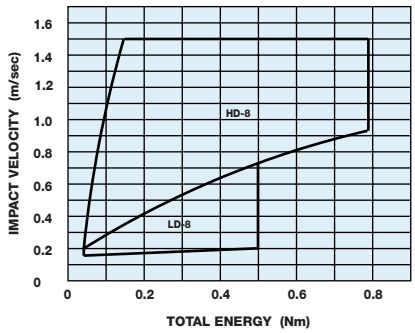

12mm Bore

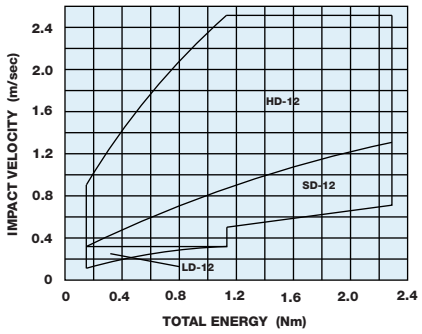

16mm Bore

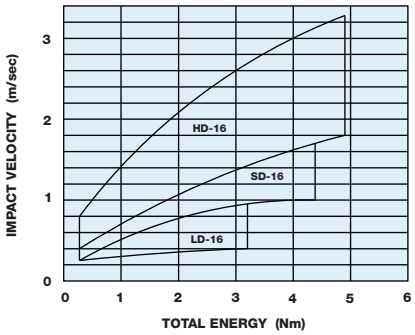

20mm Bore

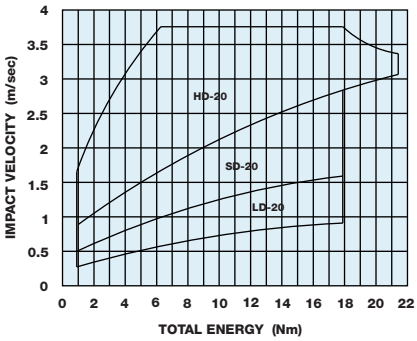

25mm Bore

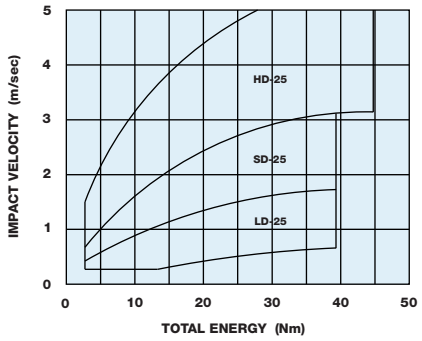

32mm Bore

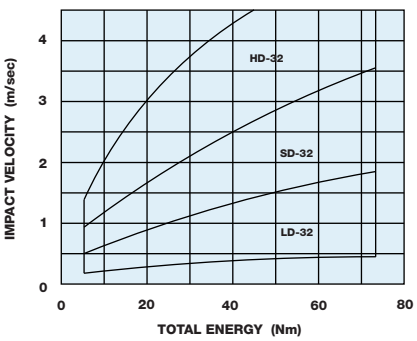

Note: A minimum impact velocity of .25 m/sec. is necessary before shock will be effective.

Bimba Narrow Profile Air Table Actuators

The NPA actuator provides precise load guiding with a recirculating ball rail above its bore. Two bearing styles are offered (single/double bearing block) to accommodate both lower cost and higher precision/cost applications. With standard strokes up to 120mm, the NPA offers longer travel length than any competitive actuator of its type.

How to Order

Model
NPA - Narrow Profile Air Table

Bore Size
12 - 12mm
20 - 20mm
32 - 32mm

NPA - 20 50 - DEM

Stroke Length	
Bore	Strokes
12mm	5-95mm
20-32mm	5-120mm

5mm increments

Options
D - Double Carrier Bearing Block
E - U.S. Customary Units (inch)
M - Magnetic Position Sensing
V - High Temperature Operation (-15° to 135°C, 0° to 275°F)

Price List

Bore	Base Price by Stroke				Options		
	5-35mm	40-65mm	70-95mm	100-120mm	D	M	V
12mm	$302.90	$328.85	$406.10	N/A	$ 97.05	$ 6.75	$ 8.20
20mm	380.20	438.30	541.25	650.75	193.65	13.05	10.40
32mm	541.25	573.55	670.05	837.65	238.50	13.05	12.45

Dimensions
NPA-12

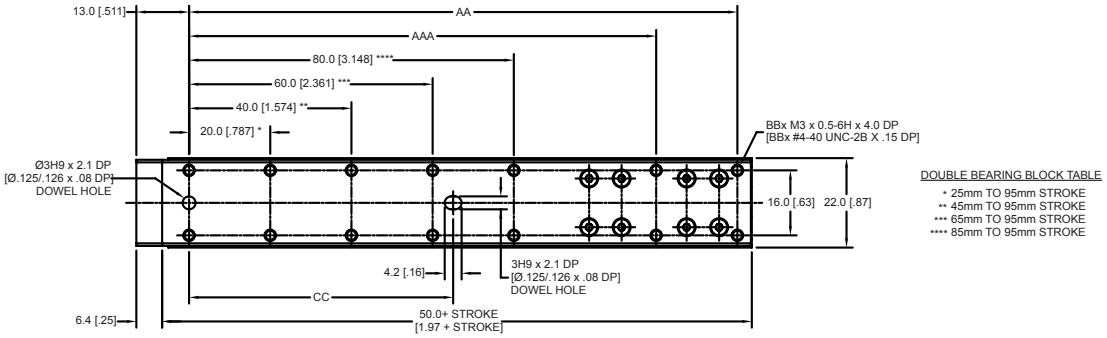

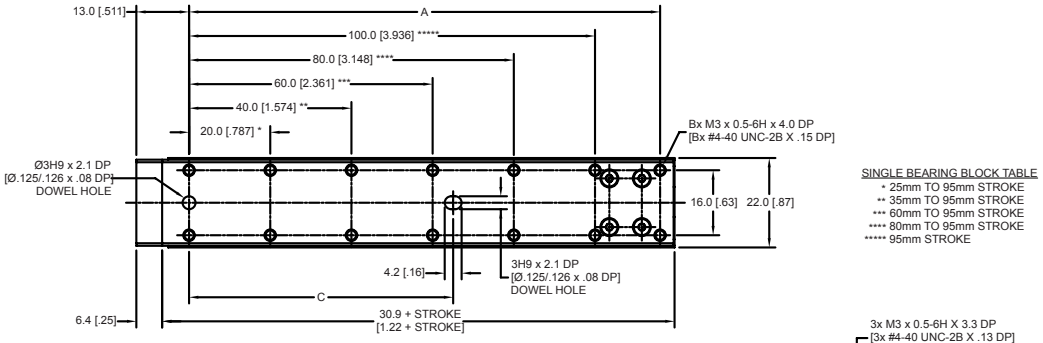

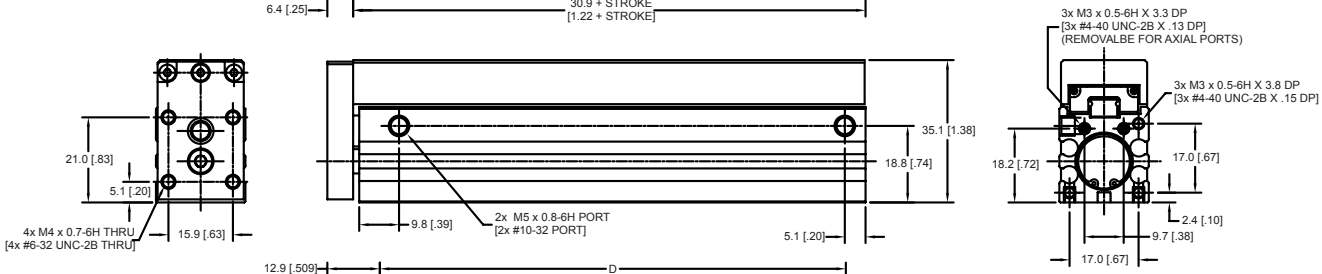

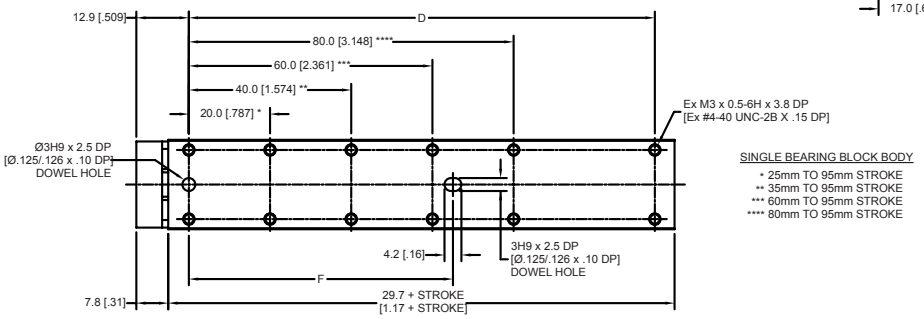

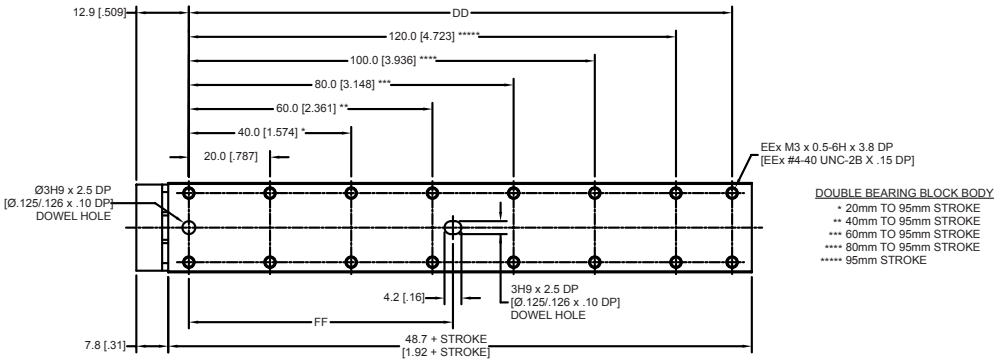

Dimensions
NPA-12

Metric Dimensions

Stroke	A	AA	AAA	B	BB	C	CC	D	DD	E	EE	F	FF
5	26	45	25	4	6	26	45	24.7	43.8	4	6	24.8	43.9
10	31	50	30	4	6	31	50	29.7	48.8	4	6	29.8	48.9
15	36	55	35	4	6	36	55	34.7	53.8	4	6	34.8	53.9
20	41	60	40	4	6	41	60	39.7	58.8	4	8	39.9	58.9
25	46	65	45	6	8	46	65	44.7	63.8	6	8	44.8	63.9
30	51	70	50	6	8	51	65	49.7	68.8	6	8	49.8	65.0
35	56	75	55	8	8	56	65	54.7	73.8	8	8	54.8	65.0
40	61	80	60	8	8	61	65	59.7	78.8	8	10	59.8	65.0
45	66	85	65	8	10	65	65	64.7	83.8	8	10	65.0	65.0
50	71	90	70	8	10	65	65	69.7	88.8	8	10	65.0	65.0
55	76	95	75	8	10	65	65	74.7	93.8	8	10	65.0	65.0
60	81	100	80	10	10	65	65	79.7	98.8	10	12	65.0	65.0
65	86	105	85	10	12	65	65	84.7	103.8	10	12	65.0	65.0
70	91	110	90	10	12	65	65	89.7	108.8	10	12	65.0	65.0
75	96	115	95	10	12	65	65	94.7	113.8	10	12	65.0	65.0
80	101	120	100	12	12	65	65	99.7	118.8	12	14	65.0	65.0
85	106	125	105	12	14	65	65	104.7	123.7	12	14	65.0	65.0
90	111	130	110	12	14	65	65	109.7	128.8	12	14	65.0	65.0
95	116	135	115	14	14	65	65	114.7	133.8	12	16	65.0	65.0

English Dimensions (Stroke is specified in mm)

Stroke	A	AA	AAA	B	BB	C	CC	D	DD	E	EE	F	FF
5	1.023	1.772	0.985	4	6	1.023	1.772	0.974	1.723	4	6	0.978	1.727
10	1.220	1.969	1.182	4	6	1.220	1.969	1.171	1.920	4	6	1.175	1.924
15	1.417	2.166	1.379	4	6	1.417	2.165	1.368	2.117	4	6	1.372	2.121
20	1.613	2.362	1.575	4	6	1.614	2.362	1.564	2.313	4	8	1.569	2.318
25	1.810	2.559	1.772	6	8	1.810	2.559	1.761	2.510	6	8	1.765	2.514
30	2.007	2.756	1.969	6	8	2.007	2.560	1.958	2.707	6	8	1.962	2.560
35	2.204	2.953	2.166	8	8	2.204	2.560	2.155	2.904	8	8	2.159	2.560
40	2.401	3.150	2.363	8	8	2.401	2.560	2.352	3.101	8	10	2.356	2.560
45	2.598	3.347	2.560	8	10	2.560	2.560	2.549	3.298	8	10	2.560	2.560
50	2.795	3.544	2.757	8	10	2.560	2.560	2.746	3.495	8	10	2.560	2.560
55	2.991	3.740	2.953	8	10	2.560	2.560	2.942	3.691	8	10	2.560	2.560
60	3.188	3.937	3.150	10	10	2.560	2.560	3.139	3.888	10	12	2.560	2.560
65	3.385	4.134	3.347	10	12	2.560	2.560	3.336	4.085	10	12	2.560	2.560
70	3.582	4.331	3.544	10	12	2.560	2.560	3.533	4.282	10	12	2.560	2.560
75	3.779	4.528	3.741	10	12	2.560	2.560	3.730	4.479	10	12	2.560	2.560
80	3.976	4.725	3.938	12	12	2.560	2.560	3.927	4.676	12	14	2.560	2.560
85	4.172	4.921	4.134	`12	14	2.560	2.560	4.123	4.872	12	14	2.560	2.560
90	4.369	5.118	4.331	12	14	2.560	2.560	4.320	5.069	12	14	2.560	2.560
95	4.566	5.315	4.528	14	14	2.560	2.560	4.517	5.266	12	16	2.560	2.560

Dimensions
NPA-20

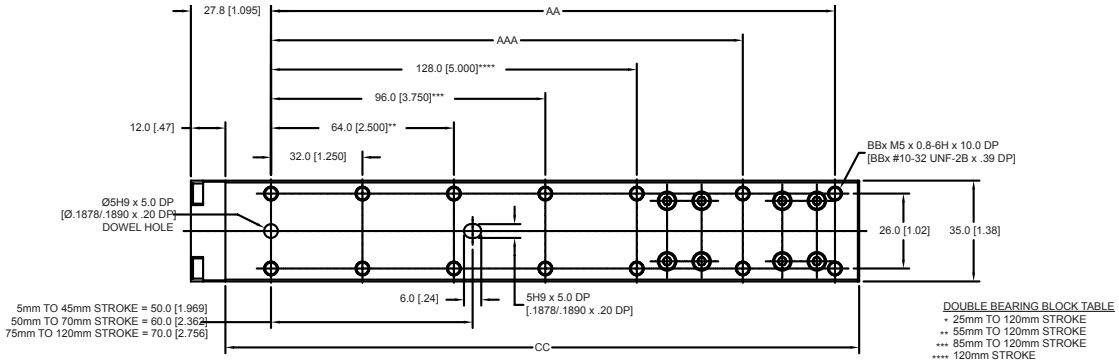

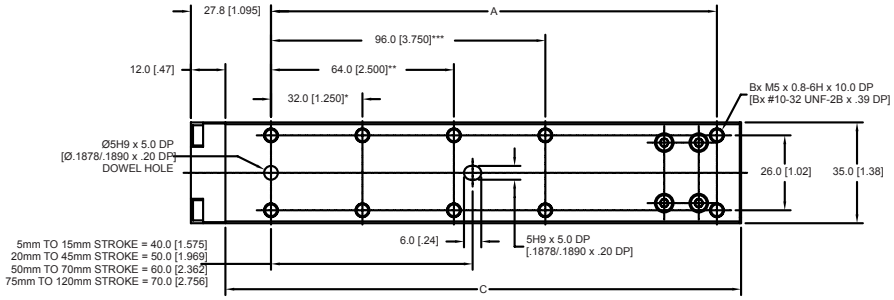

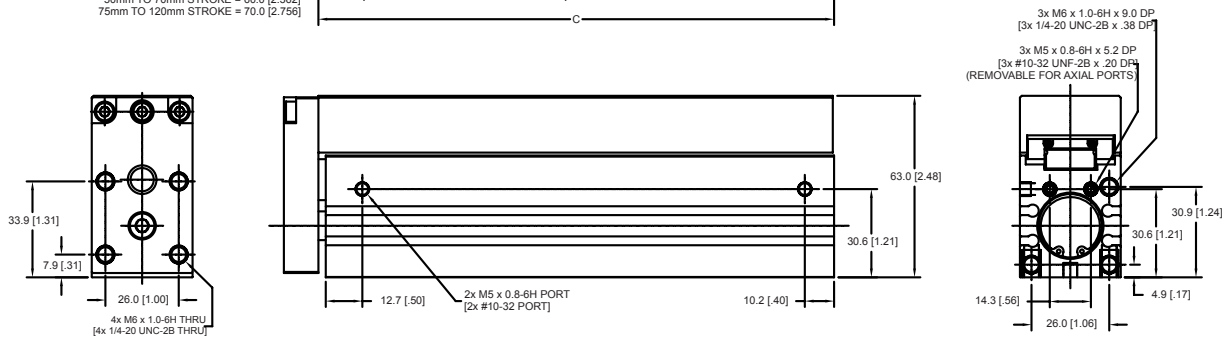

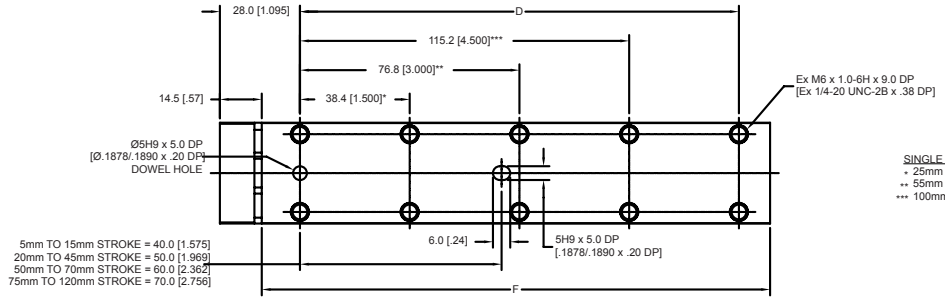

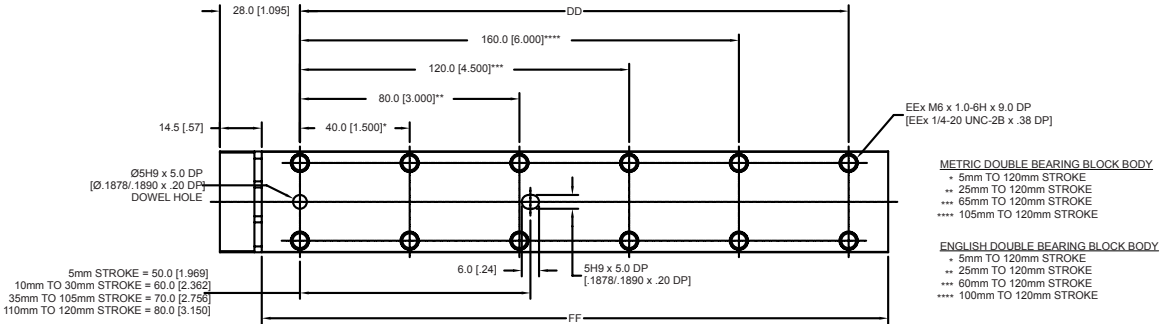

Dimensions
NPA-20

Metric Dimensions

Stroke	A	AA	AAA	B	BB	C	CC	D	DD	E	EE	F	FF
5	39.8	80.8	48.8	4	6	63.6	104.6	35	76	4	6	61.5	50
10	44.8	85.8	53.8	4	6	68.6	109.6	40	81	4	6	66.5	60
15	49.8	95.8	63.8	4	6	73.6	119.6	45	91	4	6	71.5	60
20	54.8	95.8	63.8	4	6	78.6	119.6	50	91	4	6	76.5	60
25	64.8	100.8	68.8	4	8	88.6	124.6	60	96	6	8	86.5	60
30	64.8	105.8	73.8	4	8	88.6	129.6	60	101	6	8	86.5	60
35	69.8	110.8	78.8	4	8	93.6	134.6	65	106	6	8	91.5	70
40	74.8	115.8	83.8	6	8	98.6	139.6	70	111	6	8	96.5	70
45	79.8	125.8	93.8	6	8	103.6	149.6	75	121	6	8	101.5	70
50	84.8	125.8	93.8	6	8	108.6	149.6	80	121	6	8	106.5	70
55	94.8	130.8	98.8	6	10	118.6	154.6	90	126	6	8	116.5	70
60	94.8	135.8	103.8	6	10	118.6	159.6	90	131	6	8	116.5	70
65	99.8	140.8	108.8	6	10	123.6	164.6	95	136	8	10	121.5	70
70	104.8	145.8	113.8	8	10	128.6	169.6	100	141	8	10	126.5	70
75	109.8	155.8	123.8	8	10	133.6	179.6	105	151	8	10	131.5	70
80	114.8	155.8	123.8	8	10	138.6	179.6	110	151	8	10	136.5	70
85	124.8	160.8	128.8	8	12	148.6	184.6	120	156	8	10	146.5	70
90	124.8	165.8	133.8	8	12	148.6	189.6	120	161	8	10	146.5	70
95	129.8	170.8	138.8	8	12	153.6	194.6	125	166	8	10	151.5	70
100	134.8	175.8	143.8	10	12	158.6	199.6	130	171	8	10	156.5	70
105	139.8	185.8	153.8	10	12	163.6	209.6	135	181	10	12	161.5	70
110	144.8	185.8	153.8	10	12	168.6	209.6	140	181	10	12	166.5	80
115	154.8	190.8	158.8	10	12	178.6	214.6	150	186	10	12	176.5	80
120	154.8	195.8	163.8	10	14	178.6	219.6	150	191	10	12	176.5	80

English Dimensions (Stroke is specified in mm)

Stroke	A	AA	AAA	B	BB	C	CC	D	DD	E	EE	F	FF
5	1.568	3.182	1.922	4	6	2.50	4.12	1.377	2.991	4	6	2.42	1.97
10	1.764	3.379	2.119	4	6	2.70	4.32	1.574	3.188	4	6	2.62	2.36
15	1.961	3.772	2.512	4	6	2.90	4.71	1.771	3.582	4	6	2.82	2.36
20	2.158	3.772	2.512	4	6	3.09	4.71	1.968	3.582	4	6	3.01	2.36
25	2.552	3.969	2.709	4	8	3.49	4.91	2.362	3.779	6	8	3.41	2.36
30	2.552	4.166	2.906	4	8	3.49	5.10	2.362	3.976	6	8	3.41	2.36
35	2.749	4.363	3.103	4	8	3.69	5.30	2.558	4.173	6	8	3.60	2.76
40	2.946	4.560	3.300	6	8	3.88	5.50	2.755	4.369	6	8	3.80	2.76
45	3.142	4.953	3.693	6	8	4.08	5.89	2.952	4.763	6	8	4.00	2.76
50	3.339	4.953	3.693	6	8	4.28	5.89	3.149	4.763	6	8	4.19	2.76
55	3.733	5.150	3.890	6	10	4.67	6.09	3.543	4.960	8	8	4.59	2.76
60	3.733	5.347	4.087	6	10	4.67	6.28	3.543	5.157	8	10	4.59	2.76
65	3.930	5.544	4.284	6	10	4.87	6.48	3.739	5.354	8	10	4.78	2.76
70	4.127	5.741	4.481	8	10	5.06	6.68	3.936	5.550	8	10	4.98	2.76
75	4.324	6.135	4.875	8	10	5.26	7.07	4.133	5.944	8	10	5.18	2.76
80	4.520	6.135	4.875	8	10	5.46	7.07	4.330	5.944	8	10	5.37	2.76
85	4.914	6.331	5.071	8	12	5.85	7.27	4.724	6.141	8	10	5.77	2.76
90	4.914	6.528	5.268	8	12	5.85	7.46	4.724	6.338	8	10	5.77	2.76
95	5.111	6.725	5.465	8	12	6.05	7.66	4.921	6.535	8	10	5.97	2.76
100	5.308	6.922	5.662	10	12	6.24	7.86	5.117	6.732	10	12	6.16	2.76
105	5.505	7.316	6.056	10	12	6.44	8.25	5.314	7.125	10	12	6.36	2.76
110	5.701	7.316	6.056	10	12	6.64	8.25	5.511	7.125	10	12	6.56	3.15
115	6.095	7.513	6.253	10	12	7.03	8.45	5.905	7.322	10	12	6.95	3.15
120	6.095	7.709	6.449	10	14	7.03	8.65	5.905	7.519	10	12	6.95	3.15

Dimensions
NPA-32

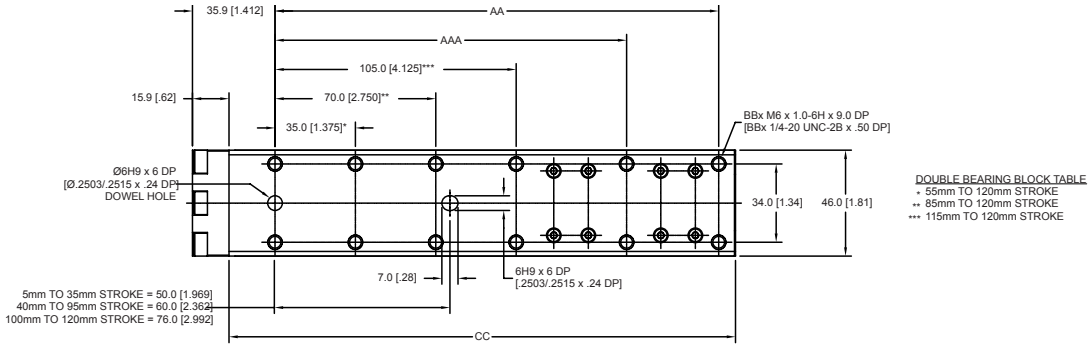

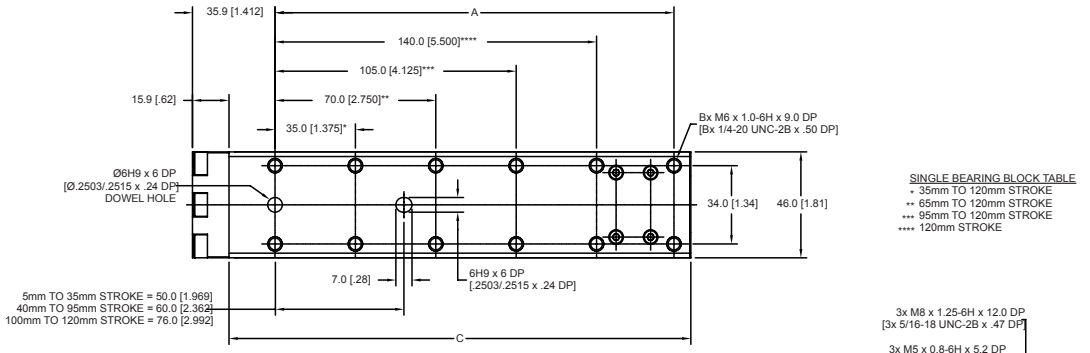

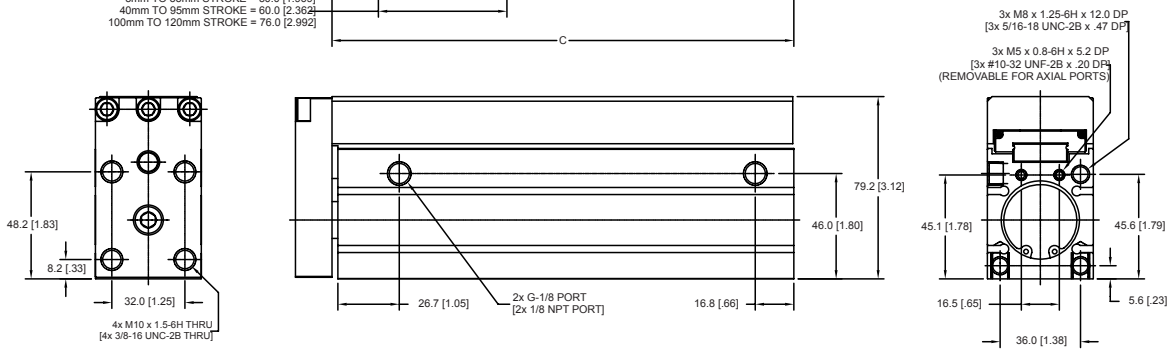

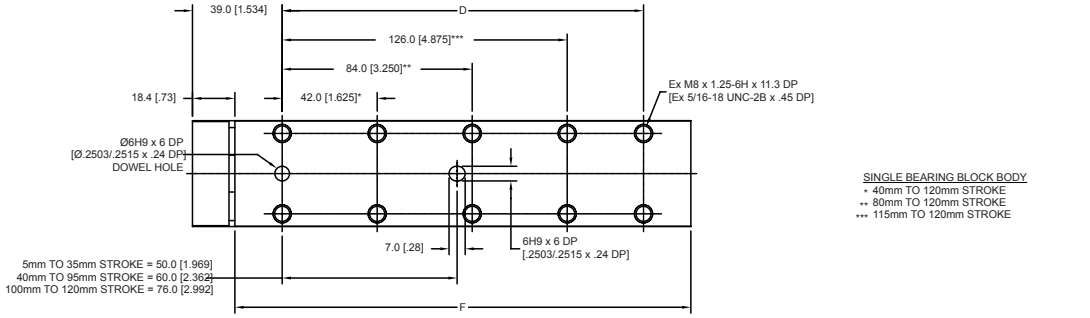

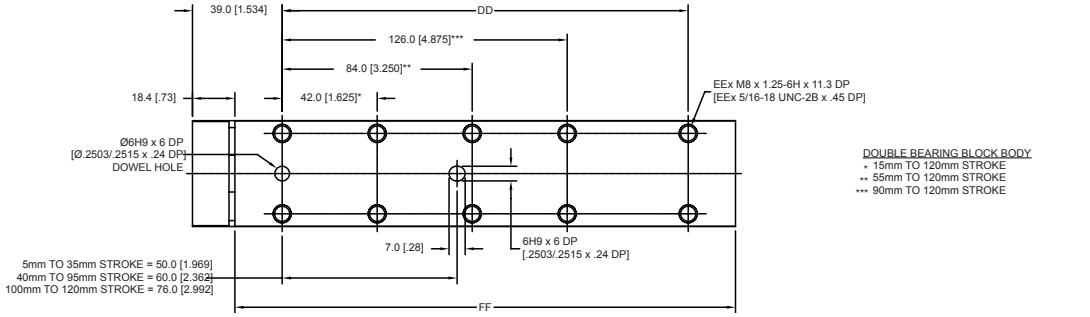

Dimensions
NPA-32

Metric Dimensions

Stroke	A	AA	AAA	B	BB	C	CC	D	DD	E	EE	F	FF
5	53.3	77.7	37.7	4	6	80.2	104.6	37	61.4	4	4	78.1	102.5
10	58.3	82.8	42.7	4	6	85.2	109.6	42	66.4	4	4	83.1	107.5
15	63.3	92.8	52.8	4	6	90.2	119.6	47	76.4	4	6	88.1	117.5
20	68.3	92.8	52.8	4	6	95.2	119.6	52	76.4	4	6	93.1	117.5
25	73.3	97.8	57.8	4	6	100.2	124.6	57	81.4	4	6	98.1	122.5
30	78.3	102.8	62.8	4	6	105.2	129.6	62	86.4	4	6	103.1	127.5
35	83.3	107.8	67.8	6	6	110.2	134.6	67	91.4	4	6	108.1	132.5
40	93.3	112.8	72.7	6	6	120.2	139.6	77	96.4	6	6	118.1	137.5
45	93.3	117.8	77.7	6	6	120.2	144.6	77	101.4	6	6	118.1	142.5
50	98.3	122.8	82.8	6	6	125.2	149.6	82	106.4	6	6	123.1	147.5
55	103.3	132.8	92.8	6	8	130.2	159.6	87	116.4	6	8	128.1	157.5
60	108.3	132.8	92.8	6	8	135.2	159.6	92	116.4	6	8	133.1	157.5
65	113.3	137.8	97.8	8	8	140.2	164.6	97	121.4	6	8	138.1	162.5
70	118.3	142.7	102.7	8	8	145.2	169.6	102	126.4	6	8	143.1	167.5
75	123.3	147.8	107.7	8	8	150.2	174.6	107	131.4	6	8	148.1	172.5
80	133.3	152.8	112.8	8	8	160.2	179.6	117	136.4	8	8	158.1	177.5
85	133.3	157.8	117.8	8	10	160.2	184.6	117	141.4	8	8	158.1	182.5
90	138.3	162.8	122.8	8	10	165.2	189.6	122	146.4	8	10	163.1	187.5
95	143.3	172.8	132.8	10	10	170.2	199.6	127	156.4	8	10	168.1	197.5
100	148.3	172.8	132.8	10	10	175.2	199.6	132	156.4	8	10	173.1	197.5
105	153.3	177.7	137.7	10	10	180.2	204.6	137	161.4	8	10	178.1	202.5
110	158.3	182.8	142.7	10	10	185.2	209.6	142	166.4	8	10	183.1	207.5
115	163.3	187.8	147.8	10	12	190.2	214.6	147	171.4	10	10	188.1	212.5
120	173.3	192.8	152.8	12	12	200.2	219.6	157	176.4	10	10	198.1	217.5

English Dimensions (Stroke is specified in mm)

Stroke	A	AA	AAA	B	BB	C	CC	D	DD	E	EE	F	FF
5	2.100	3.061	1.486	4	6	3.16	4.12	1.457	2.417	4	4	3.08	4.04
10	2.297	3.258	1.683	4	6	3.35	4.32	1.654	2.614	4	4	3.27	4.23
15	2.494	3.652	2.077	4	6	3.55	4.71	1.851	3.008	4	6	3.47	4.63
20	2.690	3.652	2.077	4	6	3.75	4.71	2.047	3.008	4	6	3.67	4.63
25	2.887	3.849	2.274	4	6	3.94	4.91	2.244	3.205	4	6	3.86	4.82
30	3.084	4.046	2.471	4	6	4.14	5.10	2.441	3.402	4	6	4.06	5.02
35	3.281	4.243	2.668	6	6	4.34	5.30	2.638	3.599	4	6	4.26	5.22
40	3.675	4.439	2.864	6	6	4.73	5.50	3.032	3.795	6	6	4.65	5.41
45	3.675	4.636	3.061	6	6	4.73	5.69	3.032	3.992	6	6	4.65	5.61
50	3.872	4.833	3.258	6	6	4.93	5.89	3.229	4.189	6	6	4.85	5.81
55	4.068	5.227	3.652	6	8	5.13	6.28	3.425	4.583	6	8	5.04	6.20
60	4.265	5.227	3.652	6	8	5.32	6.28	3.622	4.583	6	8	5.24	6.20
65	4.462	5.424	3.849	8	8	5.52	6.48	3.819	4.780	6	8	5.44	6.40
70	4.659	5.620	4.045	8	8	5.72	6.68	4.016	4.976	6	8	5.63	6.59
75	4.856	5.817	4.242	8	8	5.91	6.87	4.213	5.173	6	8	5.83	6.79
80	5.249	6.014	4.439	8	8	6.31	7.07	4.606	5.370	8	8	6.22	6.99
85	5.249	6.211	4.636	8	10	6.31	7.27	4.606	5.567	8	8	6.22	7.19
90	5.446	6.408	4.833	8	10	6.50	7.47	4.803	5.764	8	10	6.42	7.38
95	5.643	6.802	5.227	10	10	6.70	7.86	5.000	6.158	8	10	6.62	7.78
100	5.840	6.802	5.227	10	10	6.90	7.86	5.197	6.158	8	10	6.82	7.78
105	6.037	6.998	5.423	10	10	7.09	8.06	5.394	6.354	8	10	7.01	7.97
110	6.234	7.195	5.620	10	10	7.29	8.25	5.591	6.551	8	10	7.21	8.17
115	6.431	7.392	5.817	10	12	7.49	8.45	5.788	6.748	10	10	7.41	8.37
120	6.824	7.589	6.014	12	12	7.88	8.65	6.181	6.945	10	10	7.80	8.56

Engineering Specifications

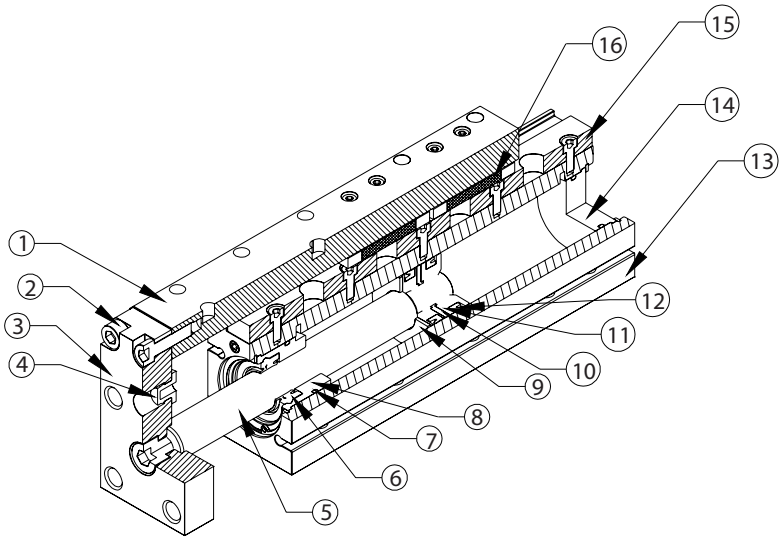

Part #	Description	Material
1	Table	Aluminum, anodized
2	SHCS	Steel, zinc plated
3	Tooling Plate	Aluminum, anodized
4	Retract Bumper	Urethane
5	Piston Rod	Stainless steel, hard chrome plated
6	Rod Seal	Nitrile (fluoroelastomer optional)
7	Rod Guide Seal	Nitrile (fluoroelastomer optional)
8	Rod Guide	Aluminum
9	Extend Bumper	Urethane
10	Magnet	Nitrile base
11	Piston	Aluminum
12	Piston Seal	Nitrile (fluoroelastomer optional)
13	Body	Aluminum, anodized
14	Rear Head	Aluminum
15/16	Table Bearing	Stainless steel

Operating Medium: Air
Maximum Operating Pressure: 10 bar (140 psi)
Temperature Range: -10° to 70°C (15° to 160°F)

Engineering Specifications

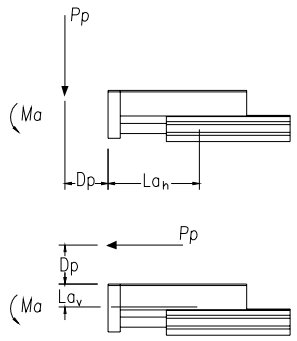

$$Pp = \frac{Ma \times 1000}{Dp + La} \text{ (Newtons)}$$

Dp = Distance from load point to body (mm).

La = Moment arm (mm) see chart.

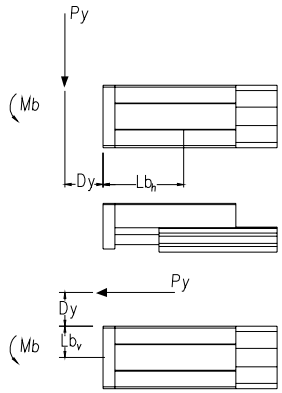

$$Py = \frac{Mb \times 1000}{Dy + Lb} \text{ (Newtons)}$$

Dy = Distance from load point to body (mm).

Lb = Moment arm (mm) see chart.

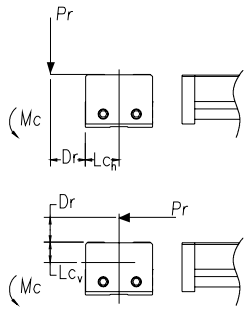

$$Pr = \frac{Mc \times 1000}{Dr + Lc} \text{ (Newtons)}$$

Dr = Distance from load point to body (mm).

Lc = Moment arm (mm) see chart.

	Maximum Allowable Moment (Nm)					
	12mm		20mm		32mm	
	Standard	Option D	Standard	Option D	Standard	Option D
Ma	2.55	8.65	22.0	27.0	36.0	70.2
Mb	2.55	8.65	22.0	27.0	36.0	70.2
Mc	5.10	13.10	59.0	70.0	107.0	157.0

	Moment Lever Arm Constants (mm)					
	12mm		20mm		32mm	
	Standard	Option D	Standard	Option D	Standard	Option D
Lah	25 + stroke	32 + stroke	45 + stroke	46 + stroke	60 + stroke	38 + stroke
Lbh	25 + stroke	32 + stroke	45 + stroke	46 + stroke	60 + stroke	38 + stroke
Lav	10.9	10.9	21.2	21.2	22.0	22.0
Lbv	10.6	10.6	17.5	17.5	23.0	23.0
Lch	10.6	10.6	17.5	17.5	23.0	23.0
Lcv	10.9	10.9	21.2	21.2	22.0	22.0

Bimba Low Profile Air Table Actuators

The NPA actuator was developed for applications that require precise load guiding, with ultra-tight space constraints. This actuator minimizes thickness with a linear recirculating ball rail located next to the bore.

How to Order and List Prices

Model/Price	Dimensions mm (inch)
LPA—Low Profile Air Table Actuator Part Number: LPA-8□-options Stroke Length: 10, 20, 30, 40, 50, 75mm List Price: 10, 20, 30 stroke: $265.75 40, 50, 75 stroke: $383.90 Options: M (MRS position sensing for MS switch series): $5.25 E (US customary-inch): N/C	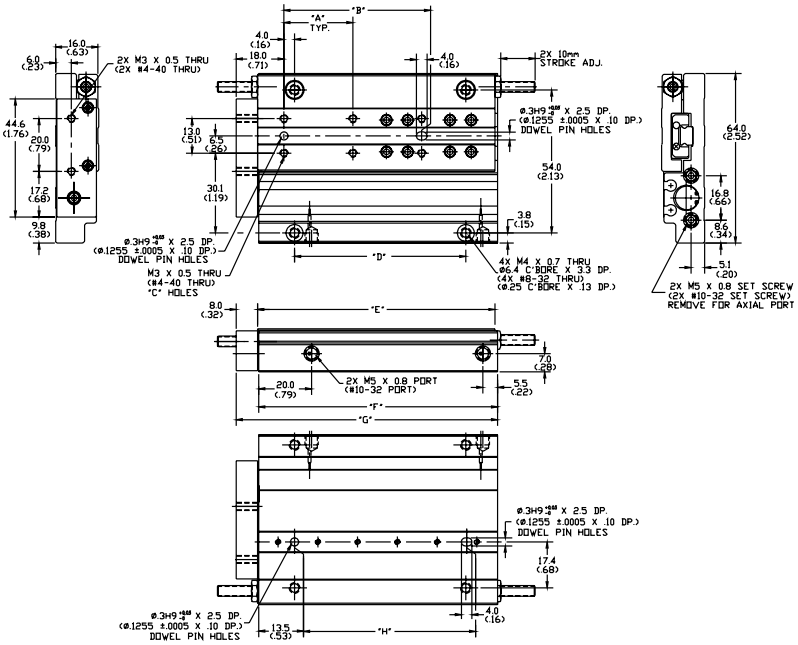

Stroke	A	B	C	D	E	F	G	H
10	25.0 (0.984)	25.0 (0.984)	4	25.0 (0.984)	49.7 (1.958)	50.2 (1.977)	58.7 (2.312)	30.0 (1.181)
20	25.0 (0.984)	25.0 (0.984)	4	35.0 (1.378)	59.7 (2.352)	60.2 (2.371)	68.7 (2.706)	35.0 (1.378)
30	24.0 (0.945)	48.0 (1.890)	6	45.0 (1.772)	69.7 (2.746)	70.2 (2.765)	78.7 (3.100)	45.0 (1.772)
40	26.0 (1.024)	52.0 (2.048)	6	65.0 (2.559)	89.7 (3.531)	90.2 (3.550)	98.7 (3.885)	65.0 (2.559)
50	32.0 (1.260)	64.0 (2.520)	6	75.0 (2.953)	99.7 (3.925)	100.2 (3.944)	108.7 (4.279)	75.0 (2.953)
75	30.0 (1.181)	90.0 (3.543)	8	100.0 (3.937)	124.7 (4.909)	125.2 (4.928)	133.7 (5.263)	105.0 (4.134)

For engineering specifications, basic operating parameters, materials of construction, loading, and accuracy, refer to TBA-8, page 2.103. For equation constants, use TBA-8 values, except $L = L_a = 7_c.1$ and $L_{bv} - L_{ch} = 23$

Bimba Diaphragm Cylinders

This 1-1/4" bore diaphragm cylinder is designed for a clamping application with minimal friction losses. Its short overall height allows the cylinder to fit into a tight space with minimal friction.

How to Order and List Prices

Model/Price	Dimensions (inch)
CSS-00119-A Stroke Length: .12" List Price: $46.80 Availability: Stock Item	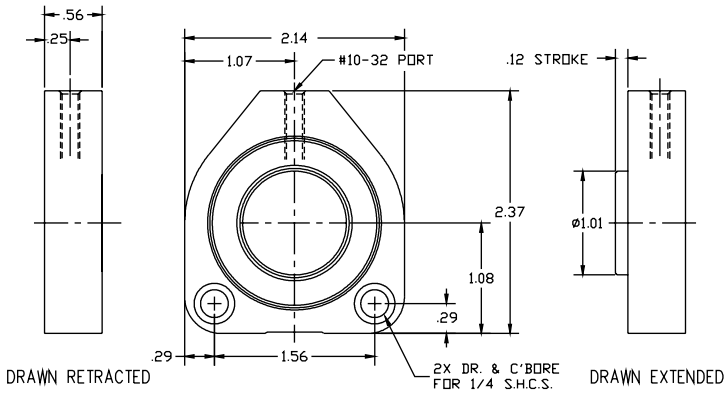

Engineering Specifications

Maximum Operating Pressure: 120 psi
Operating Temperature: 150° F
Cylinder Body: Aluminum
Diaphragm: 50 Durometer Nitrile with reinforced polyester fabric

Note:
- Output force will be approximately 15% less than theoretical when units are not extended full stroke.
- Cylinders should not be operated without a part being clamped (extension should be limited by customer to maximize life).

How it Works

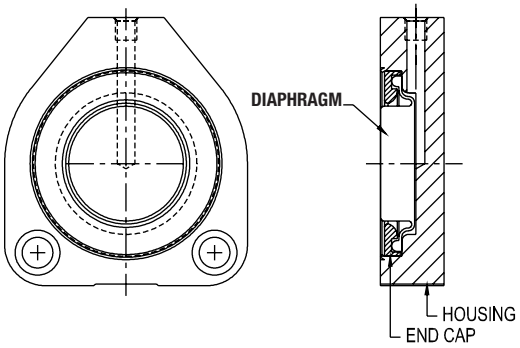

Bimba Miniature "Cube" Cylinders

CFS-01011-A is a double-acting, miniature "cube" cylinder (1/2" x 1/2" x 1/2") ideal for applications requiring low output force in extremely tight spaces. This cylinder has been successfully applied in various semiconductor industry applications. Several are mounted side-by-side in a test fixture for circuit board continuity testing. Another application involves silicon wafer processing, in which the cylinders are used to clamp wafers during certain operations.

How to Order and List Prices

Model/Price	Dimensions (inch)
CFS-01011-A Bore Size: .188" Stroke Length: .125" List Price: $48.80 Availability: Stock Item	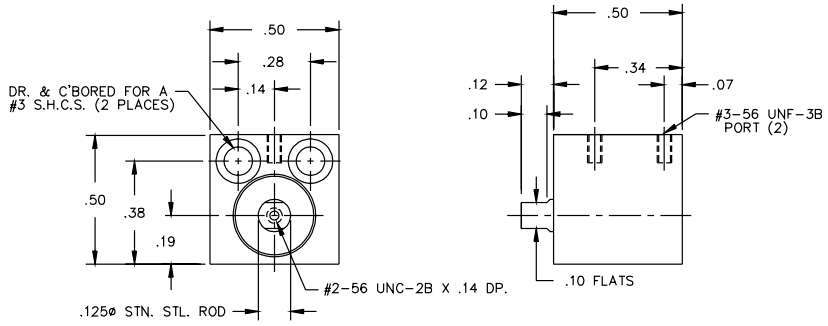

Engineering Specifications

Maximum Operating Medium:	100 psi
Power Factors:	Extend .028
	Retract .015
Cylinder Body:	Aluminum Alloy
Piston Rod:	303 Stainless Steel
Rod Bearing:	Brass
Weight:	.25 oz. (7.8 grams)
Lubrication:	Silicone Fluid